fienza

CLEANERS SINK BASKET WASTE

Code	A5
Colour	Stainless Steel
Material	Stainless Steel
Install Type	

Details

- Basket-shaped strainer to stop food from going down the drain
- Easily remove the strainer to empty food waste into the bin
- Made from polished 304 stainless steel
- Suits Cleaners Sink (68800)
- 50 mm outlet, 63 mm deep

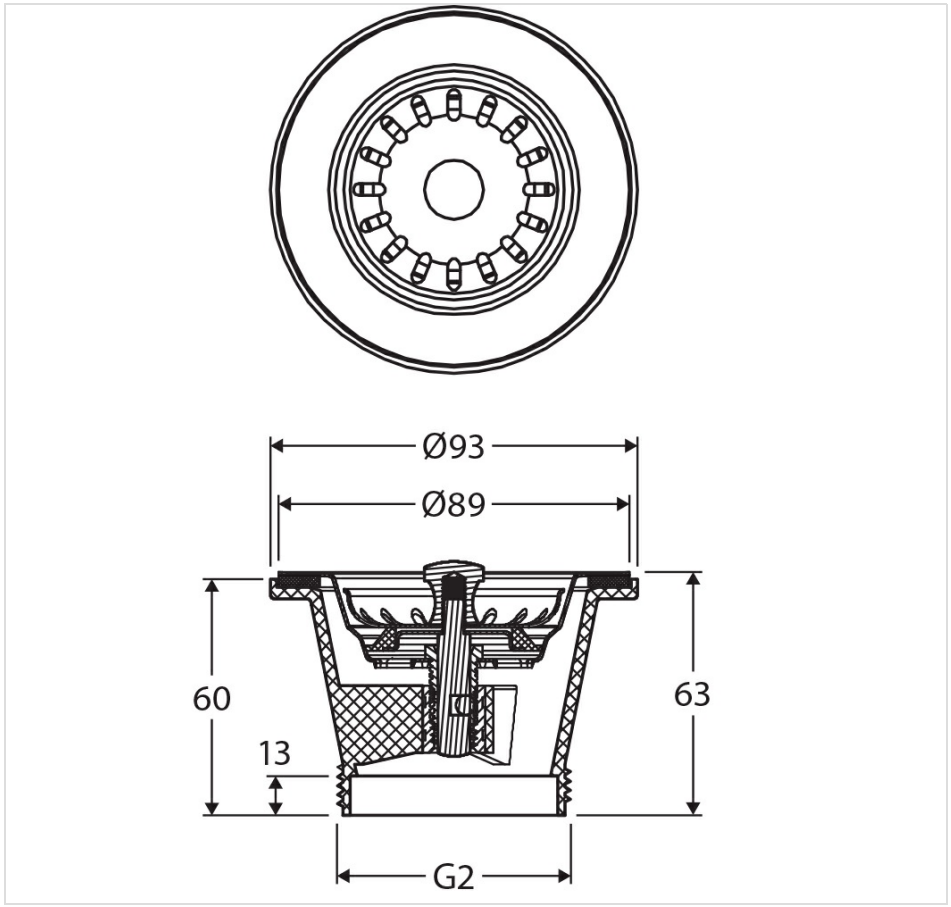



Specifications

Overall Size	93 mm (L) × 93 mm (W) × 63 mm (H)
Weight	0.06 kg
Warranty	Visit: **fienza.com.au/warranty** for more details
WELS Registration	N/A
WELS Flow Rating	N/A

We aim to ensure that specifications are correct at the time of publication. All measurements are shown in millimetres. Always use measurements of actual product received for final specification as the technical drawing may contain differences. Please note this product may have a visible printed FIENZA or Watermark logo. Due to printing limitations, physical colour may vary from the image shown. FIENZA reserves the right to make modifications without prior notice.