fienza

HANA 55L SINK PROTECTOR - STAINLESS STEEL

Code	A36
Colour	Stainless Steel
Material	Stainless Steel
Install Type	

Details

- Designed for protecting your sink from scuff marks and scratches when rinsing dishes, cutlery and cooking utensils
- Made from high quality 304 stainless steel
- Suite HANA Single Sink (68405)

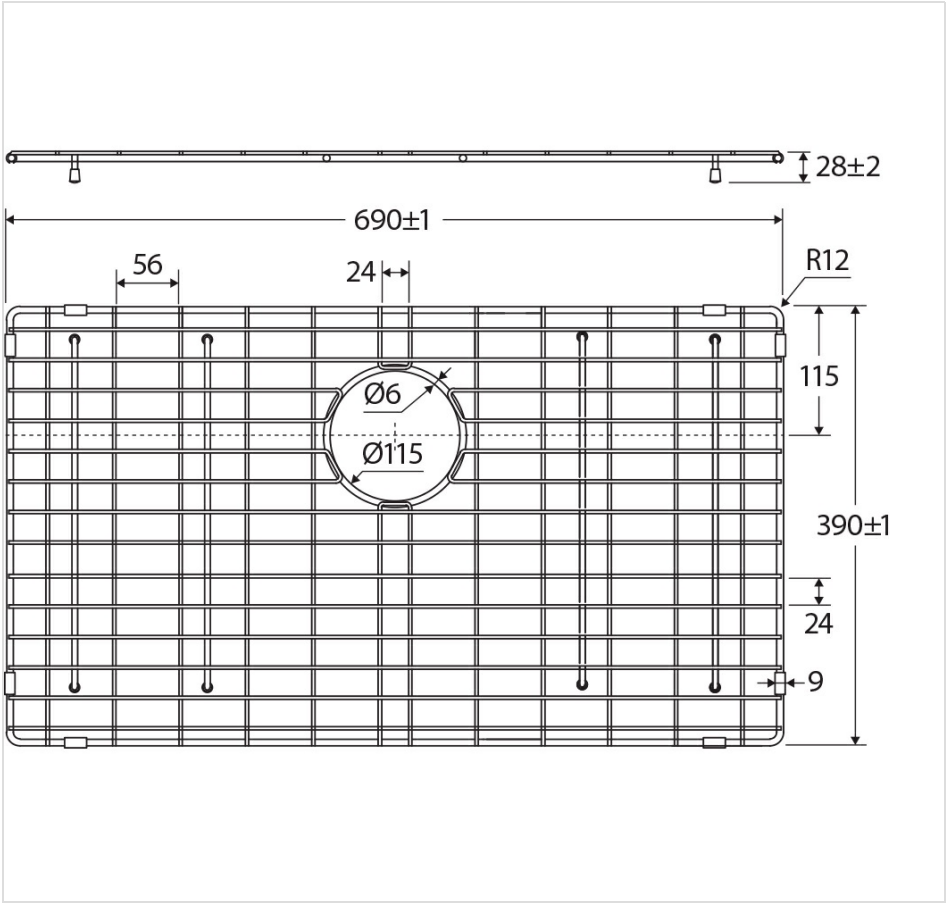

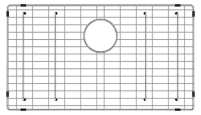

We aim to ensure that specifications are correct at the time of publication. All measurements are shown in millimetres. Always use measurements of actual product received for final specification as the technical drawing may contain differences. Please note this product may have a visible printed FIENZA or Watermark logo. Due to printing limitations, physical colour may vary from the image shown. FIENZA reserves the right to make modifications without prior notice.

Specifications

Overall Size	690 mm (L) × 28 mm (W) × 390 mm (H)
Weight	
Warranty	Visit: **fienza.com.au/warranty** for more details
WELS Registration	N/A
WELS Flow Rating	N/A