fienza

HAMPTON 900 WALL HUNG CABINET

Code	90T-C
Colour	Satin White
Material	Sustainably Sourced Timber
Install Type	Wall Hung

Details

- Satin white exterior and interior
- Discrete white aluminium pull-channels
- Soft close drawers
- Full extension drawer runners
- 16 mm thick backing boards and drawer bases

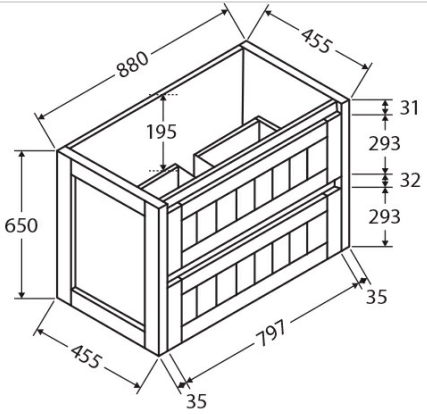

TOP VIEW: DRAWERS

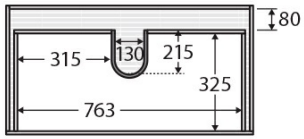

SIDE VIEW: RECESS & DRAWER STORAGE

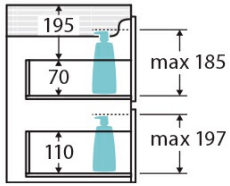



Product/Installation Notes

Cabinet only. Does not include vanity top. Please note that customers are responsible for verifying all specifications and measurements of product selections are compatible before ordering, including cabinetry, vanity tops, basins, custom basin positions, tap holes, plumbing, wastes, and related fittings.

Specifications

Overall Size	
Weight	
Warranty	Visit: **fienza.com.au/warranty** for more details
WELS Registration	N/A
WELS Flow Rating	N/A

We aim to ensure that specifications are correct at the time of publication. All measurements are shown in millimetres. Always use measurements of actual product received for final specification as the technical drawing may contain differences. Please note this product may have a visible printed FIENZA or Watermark logo. Due to printing limitations, physical colour may vary from the image shown. FIENZA reserves the right to make modifications without prior notice.