SATORI EDGE 900 WALL HUNG VANITY - RIGHT DRAWERS - INDUSTRIAL

Code	SAT90XR
Colour	Industrial
Material	Sustainably sourced timber
Install Type	Wall Hung

Details

Satori Moulded Basin Top:

- Unique warm grey finish
- 18-20mm thick concrete
- Concrete with food-grade nano coating
- Reversible for left or right facing bowl
- No overflow
- Requires 32mm non-overflow waste (WAS72 or WAS59; not included)

Edge Wall Hung Cabinet:

- Industrial textured print on interior and exterior
- Edge finger-pull opening
- Soft close doors and drawers
- Full extension drawer runners
- 16 mm thick backing boards and drawer bases

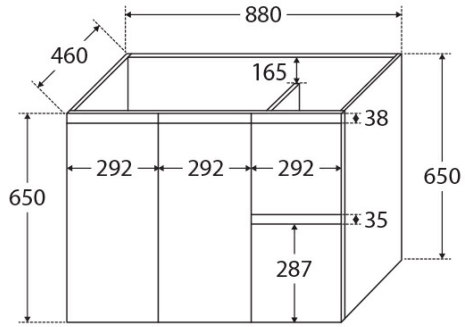

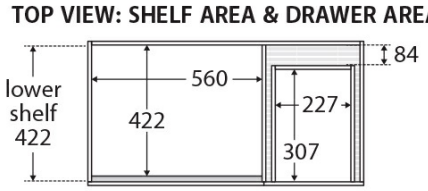

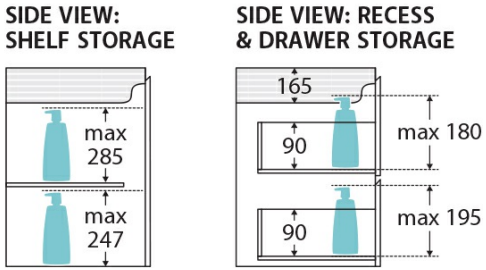



Product/Installation Notes

Please note that customers are responsible for verifying all specifications and measurements of product selections are compatible before ordering, including cabinetry, vanity tops, basins, custom basin positions, tap holes, plumbing, wastes, and related fittings.

Specifications

Overall Size	880 mm (L) × 460 mm (W) × 650 mm (H)
Weight	
Warranty	Visit: **fienza.com.au/warranty** for more details
WELS Registration	N/A
WELS Flow Rating	N/A

We aim to ensure that specifications are correct at the time of publication. All measurements are shown in millimetres. Always use measurements of actual product received for final specification as the technical drawing may contain differences. Please note this product may have a visible printed FIENZA or Watermark logo. Due to printing limitations, physical colour may vary from the image shown. FIENZA reserves the right to make modifications without prior notice.