# EMPIRE SLIM GLASS SHELF - BRUSHED COPPER

| | |
|---|---|
| **Code** | 88907CO |
| **Colour** | Brushed Copper |
| **Material** | Stainless Steel & Glass |
| **Install Type** | Wall Mounted |

## Details

- PVD brushed copper
- Slim, rounded design
- 8 mm thick clear tempered glass shelf
- High-strength mounting brackets
- Made from glass and stainless steel

**Please note:** These products may have a visible Fienza logo marking.

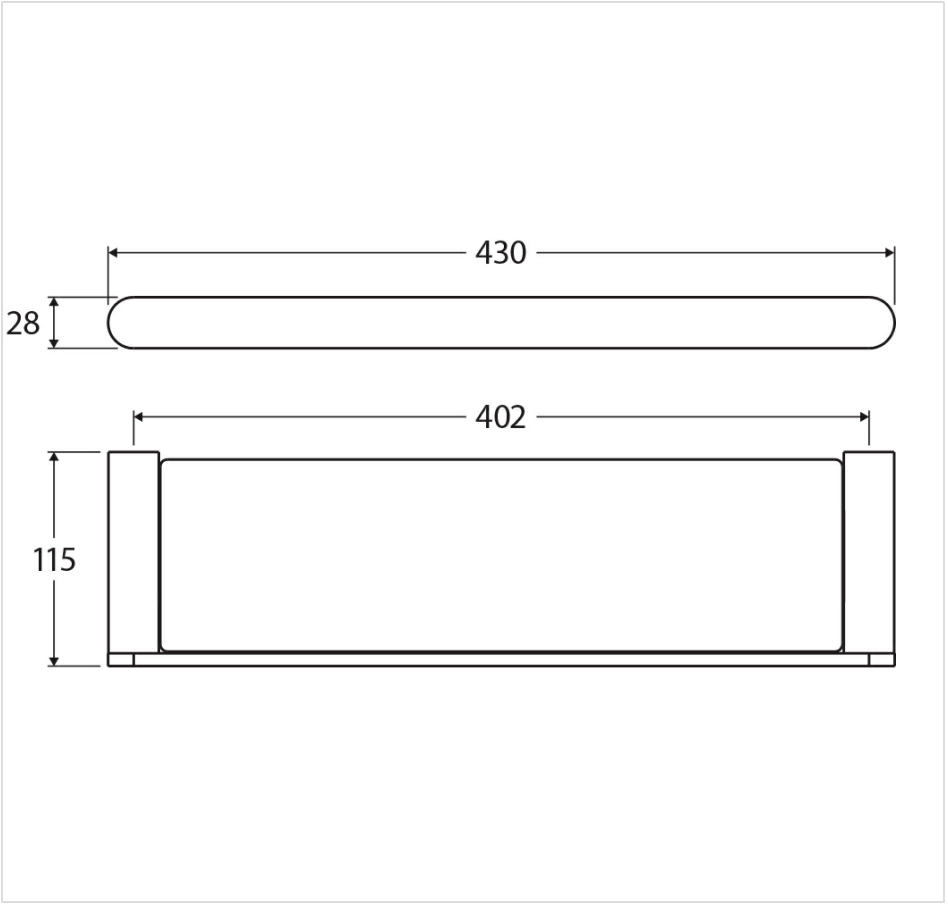


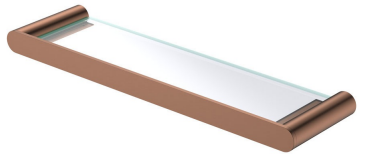

## Product/Installation Notes

N/A

## Specifications

| | |
|---|---|
| **Overall Size** | 430 mm (L) × 115 mm (W) × 28 mm (H) |
| **Weight** | 1.11 kg |
| **Warranty** | Visit: **fienza.com.au/warranty** for more details |
| **WELS Registration** | N/A |
| **WELS Flow Rating** | N/A |

We aim to ensure that specifications are correct at the time of publication. All measurements are shown in millimetres. Always use measurements of actual product received for final specification as the technical drawing may contain differences. Please note this product may have a visible printed FIENZA or Watermark logo. Due to printing limitations, physical colour may vary from the image shown. FIENZA reserves the right to make modifications without prior notice.