fienza

EMPIRE SLIM GLASS SHELF - MATTE BLACK

Code	88907B
Colour	Matte Black
Material	Stainless Steel & Glass
Install Type	Wall Mounted

Details

- Electroplated matte black
- Slim, rounded design
- 8 mm thick clear tempered glass shelf
- High-strength mounting brackets
- Made from glass and stainless steel

Please note: These products may have a visible Fienza logo marking.

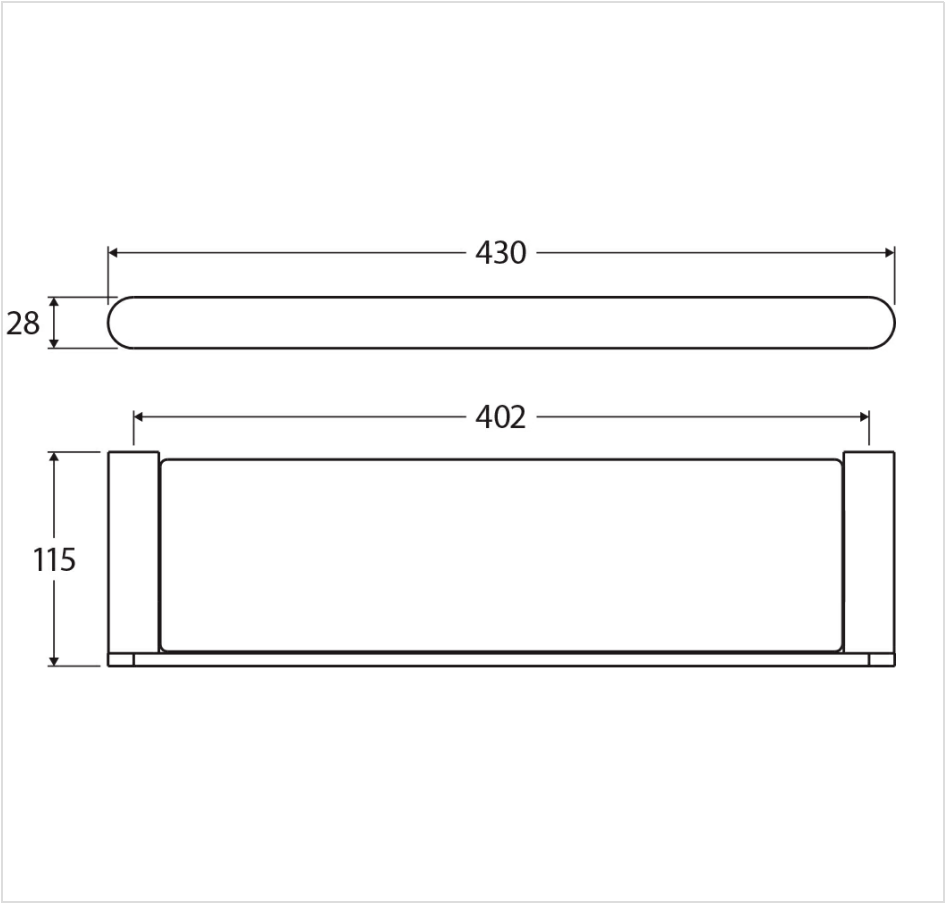

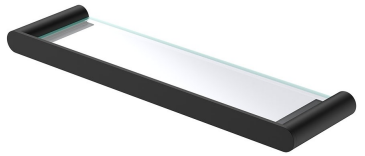

Product/Installation Notes

N/A

Specifications

Overall Size	430 mm (L) × 115 mm (W) × 28 mm (H)
Weight	1.11 kg
Warranty	Visit: **fienza.com.au/warranty** for more details
WELS Registration	N/A
WELS Flow Rating	N/A

We aim to ensure that specifications are correct at the time of publication. All measurements are shown in millimetres. Always use measurements of actual product received for final specification as the technical drawing may contain differences. Please note this product may have a visible printed FIENZA or Watermark logo. Due to printing limitations, physical colour may vary from the image shown. FIENZA reserves the right to make modifications without prior notice.