fienza

EMPIRE SLIM GLASS SOAP DISH - MATTE BLACK

Code	88906B
Colour	Matte Black
Material	Stainless Steel & Glass
Install Type	Wall Mounted

Details

- Electroplated matte black
- Frosted glass dish
- Soap dish is removable for easy cleaning
- High-strength mounting brackets
- Made from glass and stainless steel

Please note: These products may have a visible Fienza logo marking.

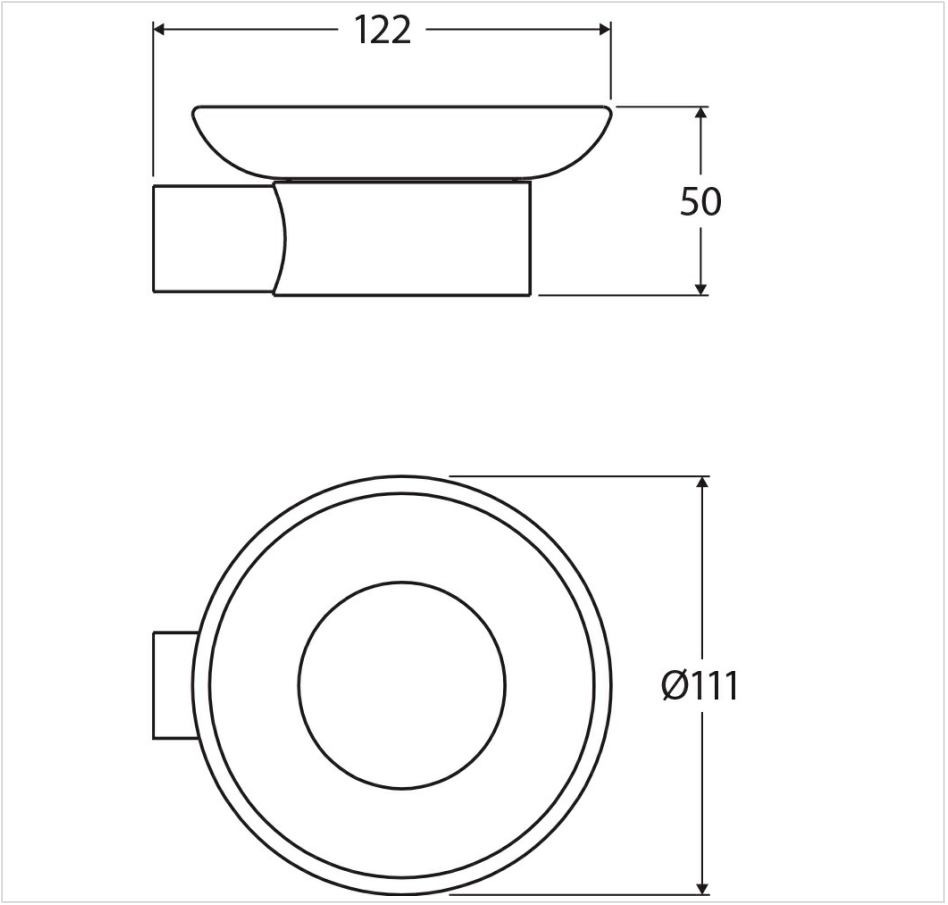



Product/Installation Notes

N/A

Specifications

Overall Size	111 mm (L) × 122 mm (W) × 50 mm (H)
Weight	0.7 kg
Warranty	Visit: **fienza.com.au/warranty** for more details
WELS Registration	N/A
WELS Flow Rating	N/A

We aim to ensure that specifications are correct at the time of publication. All measurements are shown in millimetres. Always use measurements of actual product received for final specification as the technical drawing may contain differences. Please note this product may have a visible printed FIENZA or Watermark logo. Due to printing limitations, physical colour may vary from the image shown. FIENZA reserves the right to make modifications without prior notice.