fienza

# EMPIRE SLIM SINGLE TOWEL RAIL - 800MM - URBAN BRASS

| | |
|---|---|
| **Code** | 88901800UB |
| **Colour** | Urban Brass |
| **Material** | Stainless Steel |
| **Install Type** | Wall Mounted |

## Details

- PVD urban brass
- Slim, rounded design
- High-strength mounting brackets
- Made from stainless steel

**Please note:** These products may have a visible Fienza logo marking.

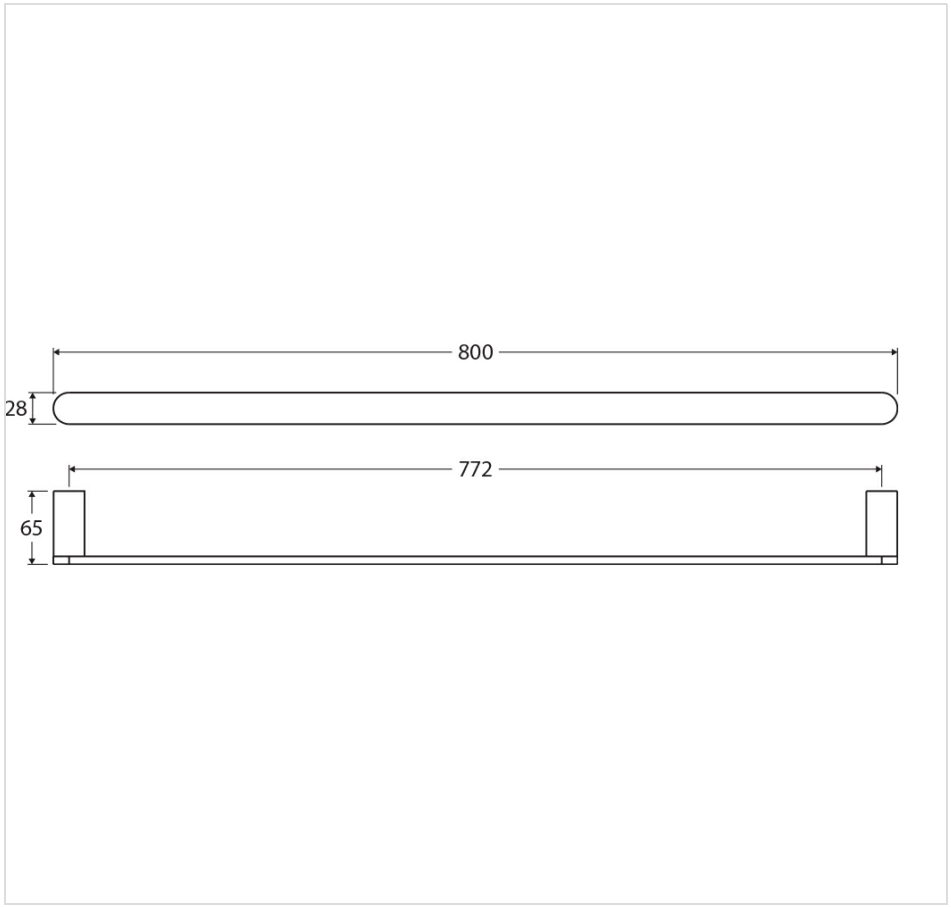




## Specifications

| | |
|---|---|
| **Overall Size** | 800 mm (L) × 65 mm (W) × 28 mm (H) |
| **Weight** | 1.5 kg |
| **Warranty** | Visit: **fienza.com.au/warranty** for more details |
| **WELS Registration** | N/A |
| **WELS Flow Rating** | N/A |

## Product/Installation Notes

Fixed length rail (not removable or adjustable);

We aim to ensure that specifications are correct at the time of publication. All measurements are shown in millimetres. Always use measurements of actual product received for final specification as the technical drawing may contain differences. Please note this product may have a visible printed FIENZA or Watermark logo. Due to printing limitations, physical colour may vary from the image shown. FIENZA reserves the right to make modifications without prior notice.