fienza

TONO SOAP SHELF - BRUSHED NICKEL

Code	85106BN
Colour	Brushed Nickel
Material	Stainless Steel
Install Type	Wall Mounted

Details

- PVD brushed nickel
- Streamlined rectangular design
- Drain channel
- High-strength mounting brackets
- Made from stainless steel

Please note: These products may have a visible Fienza logo marking.

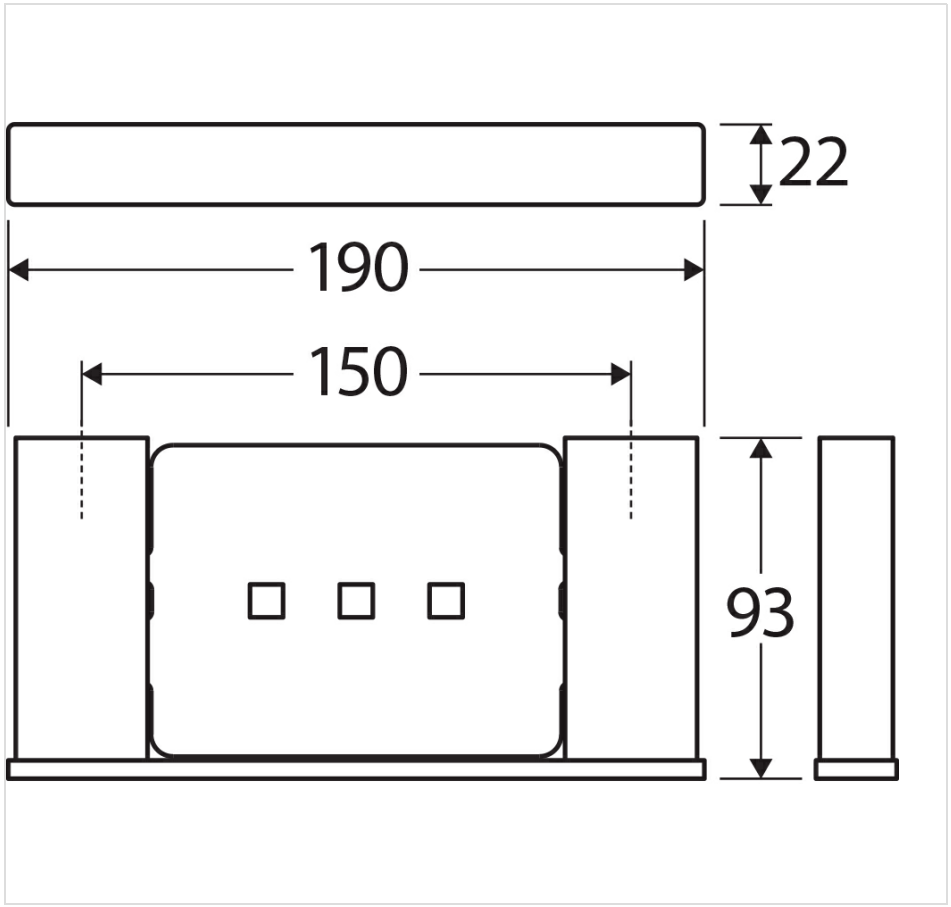



Product/Installation Notes

N/A

Specifications

Overall Size	190 mm (L) × 93 mm (W) × 22 mm (H)
Weight	0.66 kg
Warranty	Visit: **fienza.com.au/warranty** for more details
WELS Registration	N/A
WELS Flow Rating	N/A

We aim to ensure that specifications are correct at the time of publication. All measurements are shown in millimetres. Always use measurements of actual product received for final specification as the technical drawing may contain differences. Please note this product may have a visible printed FIENZA or Watermark logo. Due to printing limitations, physical colour may vary from the image shown. FIENZA reserves the right to make modifications without prior notice.