fienza

# TONO SOAP SHELF - CHROME

| | |
|---|---|
| **Code** | 85106 |
| **Colour** | Chrome |
| **Material** | Stainless Steel |
| **Install Type** | Wall Mounted |

## Details

- Electroplated chrome
- Streamlined rectangular design
- Drain channel
- High-strength mounting brackets
- Made from stainless steel

**Please note:** These products may have a visible Fienza logo marking.

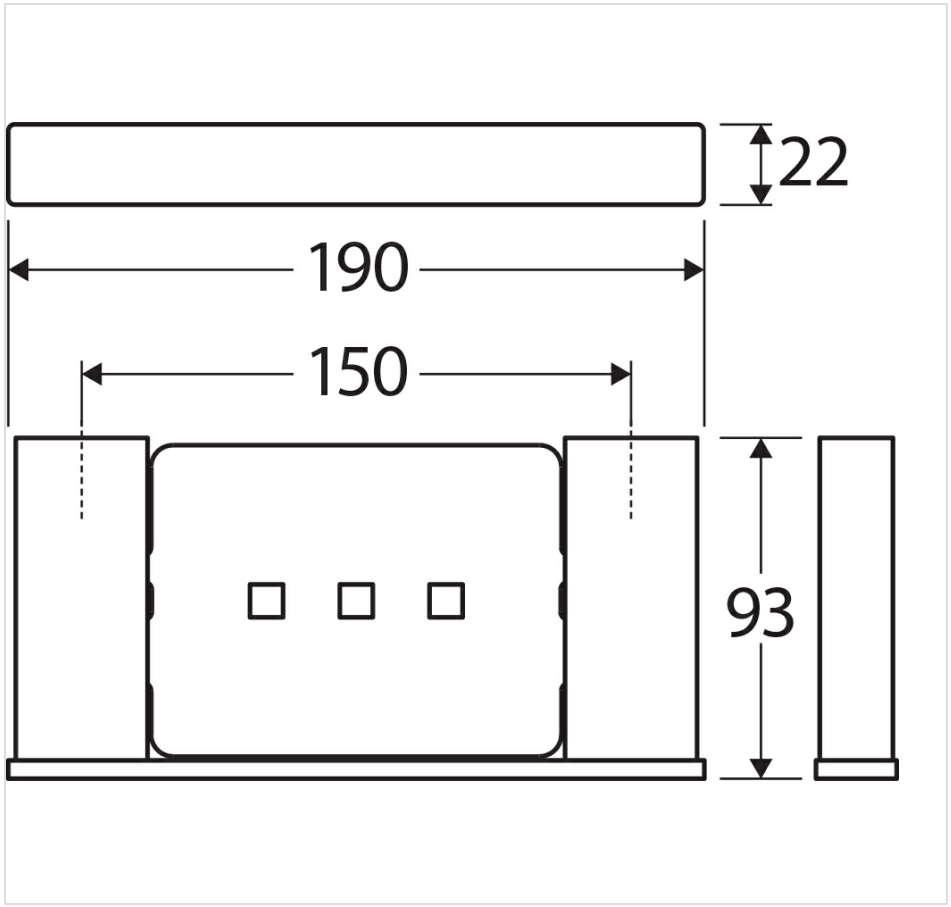




## Product/Installation Notes

N/A

## Specifications

| | |
|---|---|
| **Overall Size** | 190 mm (L) × 93 mm (W) × 22 mm (H) |
| **Weight** | 0.66 kg |
| **Warranty** | Visit: **fienza.com.au/warranty** for more details |
| **WELS Registration** | N/A |
| **WELS Flow Rating** | N/A |

We aim to ensure that specifications are correct at the time of publication. All measurements are shown in millimetres. Always use measurements of actual product received for final specification as the technical drawing may contain differences. Please note this product may have a visible printed FIENZA or Watermark logo. Due to printing limitations, physical colour may vary from the image shown. FIENZA reserves the right to make modifications without prior notice.