TONO HAND TOWEL RAIL - GUN METAL

Code	85102GM
Colour	Gun Metal
Material	Brass
Install Type	Wall Mounted

Details

- PVD gun metal
- Streamlined rectangular design
- High-strength mounting brackets
- Made from brass

Please note: These products may have a visible Fienza logo marking.

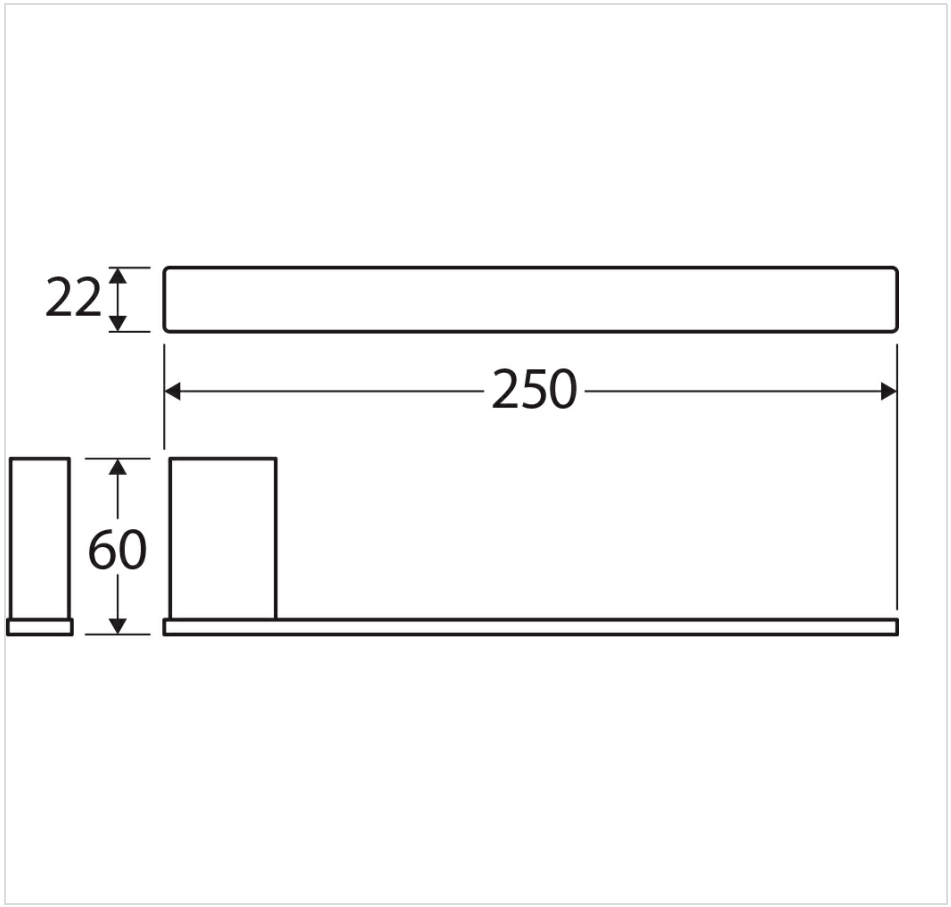

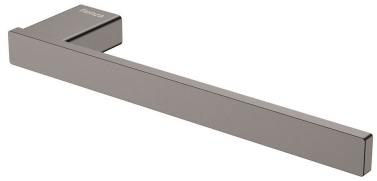

Product/Installation Notes

N/A

Specifications

Overall Size	250 mm (L) × 60 mm (W) × 22 mm (H)
Weight	0.38 kg
Warranty	Visit: **fienza.com.au/warranty** for more details
WELS Registration	N/A
WELS Flow Rating	N/A

We aim to ensure that specifications are correct at the time of publication. All measurements are shown in millimetres. Always use measurements of actual product received for final specification as the technical drawing may contain differences. Please note this product may have a visible printed FIENZA or Watermark logo. Due to printing limitations, physical colour may vary from the image shown. FIENZA reserves the right to make modifications without prior notice.