fienza

TONO SINGLE TOWEL RAIL - 610 MM - GUN METAL

Code	85101600GM
Colour	Gun Metal
Material	Stainless Steel
Install Type	Wall Mounted

Details

- PVD gun metal
- Streamlined rectangular design
- High-strength mounting brackets
- Made from stainless steel

Please note: These products may have a visible Fienza logo marking.

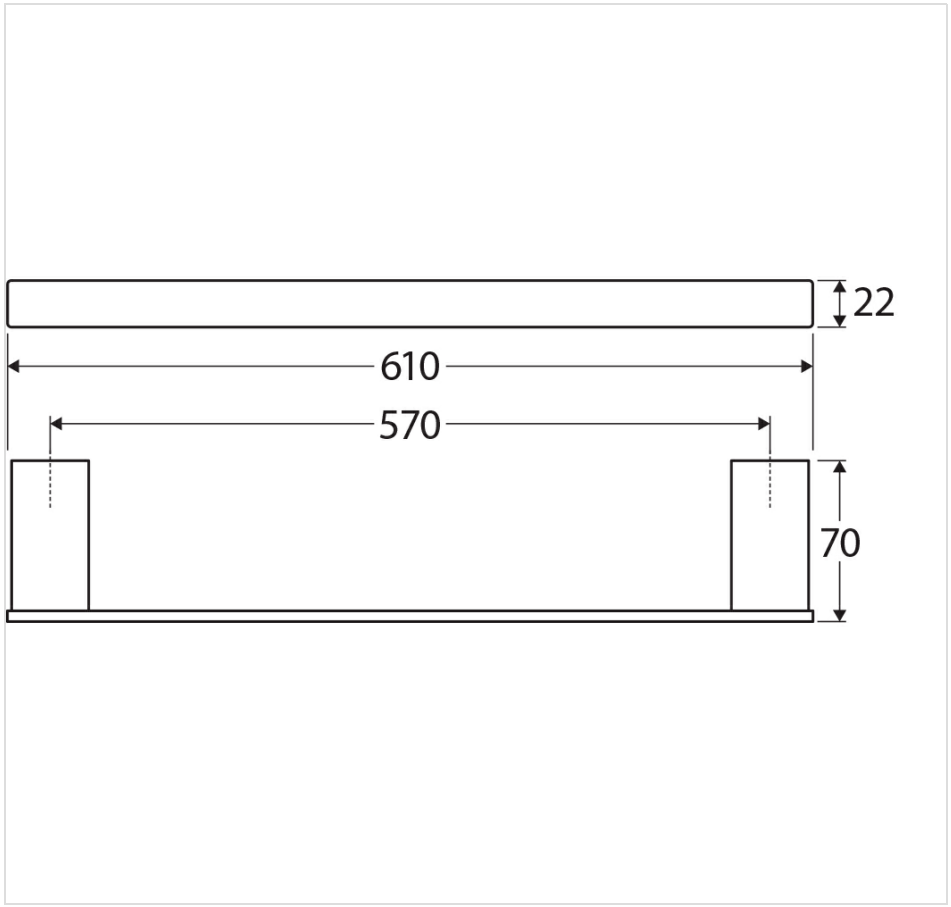



Product/Installation Notes

Fixed length rail (not removable or adjustable);

Specifications

Overall Size	610 mm (L) × 70 mm (W) × 22 mm (H)
Weight	0.95 kg
Warranty	Visit: **fienza.com.au/warranty** for more details
WELS Registration	N/A
WELS Flow Rating	N/A

We aim to ensure that specifications are correct at the time of publication. All measurements are shown in millimetres. Always use measurements of actual product received for final specification as the technical drawing may contain differences. Please note this product may have a visible printed FIENZA or Watermark logo. Due to printing limitations, physical colour may vary from the image shown. FIENZA reserves the right to make modifications without prior notice.