fienza

# KAYA DOUBLE TOILET ROLL HOLDER - GUN METAL

| | |
|---|---|
| **Code** | 82809GM |
| **Colour** | Gun Metal |
| **Material** | Stainless Steel |
| **Install Type** | Wall Mounted |

## Details

- PVD gun metal
- Circular cover plate
- Super strong 4-point wall mount
- Fully concealed fixings
- Made from stainless steel

**Please note:** These products may have a visible Fienza logo marking.

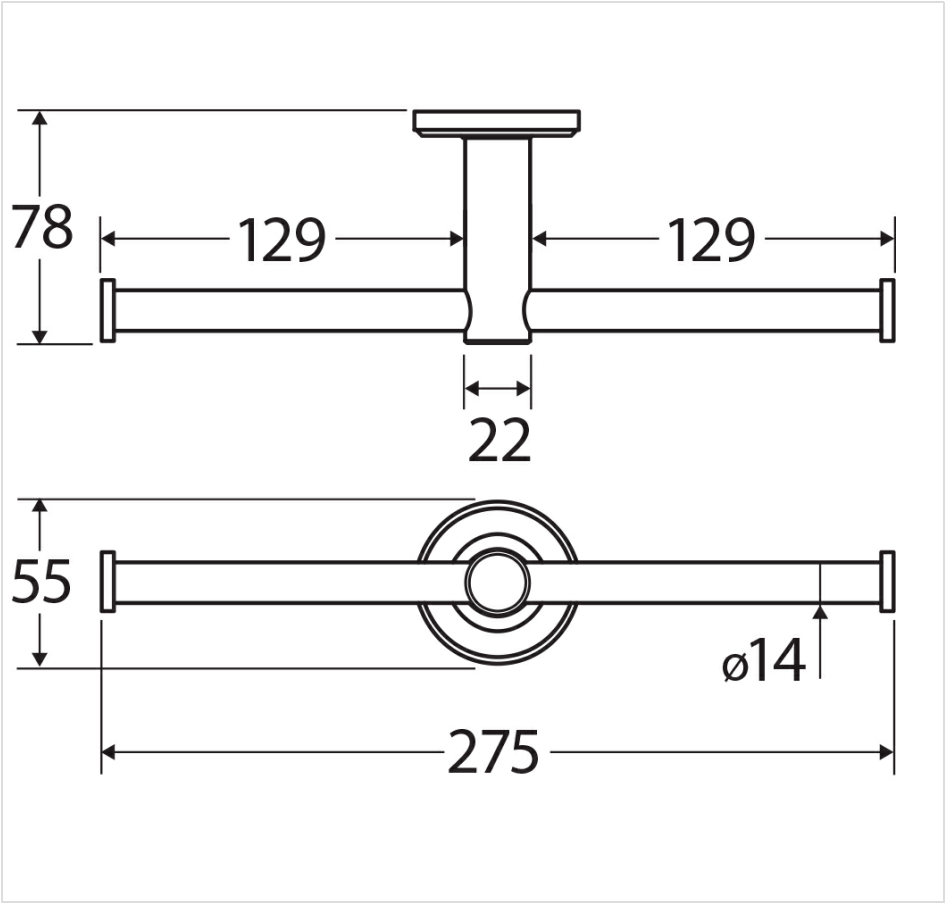




## Product/Installation Notes

One side is removable for mounting cover plate; Hex key not required for installation;

## Specifications

| | |
|---|---|
| **Overall Size** | 275 mm (L) × 78 mm (W) × 55 mm (H) |
| **Weight** | 0.25 kg |
| **Warranty** | Visit: **fienza.com.au/warranty** for more details |
| **WELS Registration** | N/A |
| **WELS Flow Rating** | N/A |

We aim to ensure that specifications are correct at the time of publication. All measurements are shown in millimetres. Always use measurements of actual product received for final specification as the technical drawing may contain differences. Please note this product may have a visible printed FIENZA or Watermark logo. Due to printing limitations, physical colour may vary from the image shown. FIENZA reserves the right to make modifications without prior notice.