fienza

KAYA DOUBLE TOWEL RAIL - 900MM - BRUSHED NICKEL

Code	82808BN
Colour	Brushed Nickel
Material	Stainless Steel & Zinc
Install Type	Wall Mounted

Details

- PVD brushed nickel
- Circular cover plate
- Super strong 5-point wall mount
- Sloping arm makes it easier to hang towels
- Fully concealed fixings
- Made from stainless steel and zinc

Please note: These products may have a visible Fienza logo marking.

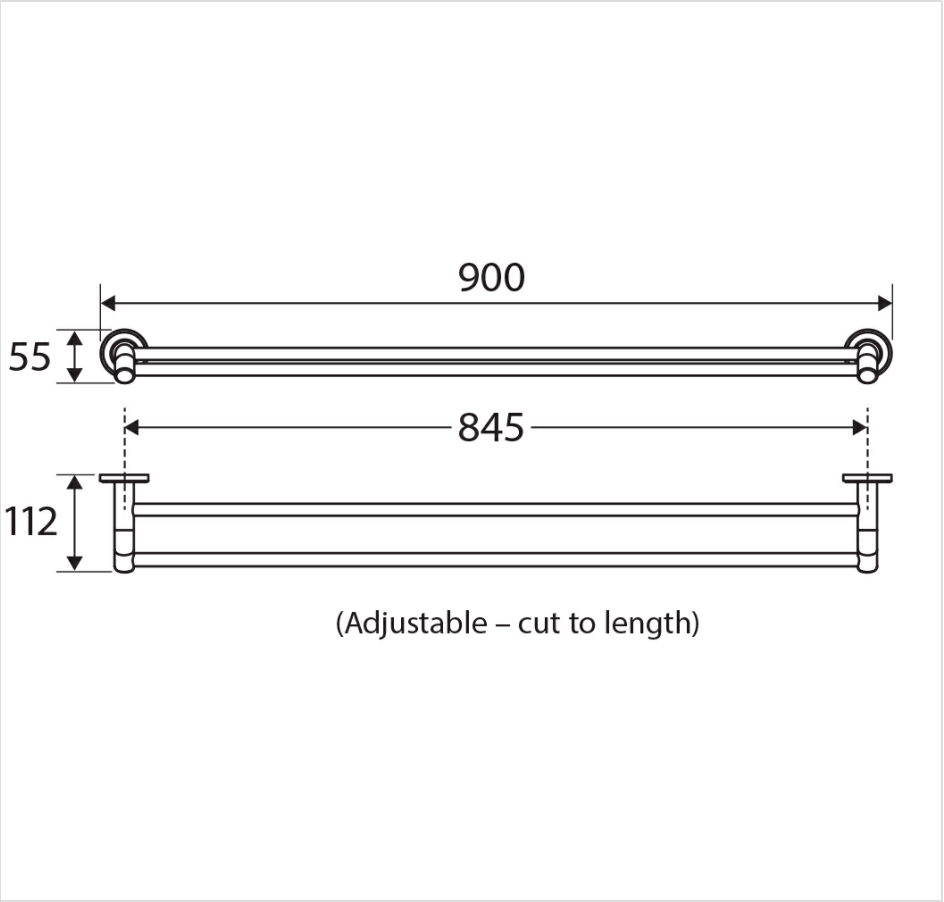



Specifications

Overall Size	900 mm (L) × 112 mm (W) × 60.5 mm (H)
Weight	1.1 kg
Warranty	Visit: **fienza.com.au/warranty** for more details
WELS Registration	N/A
WELS Flow Rating	N/A

Product/Installation Notes

Adjustable no-spin rail design (cut to length); Hex key not required for mounting (only used to secure rail);

We aim to ensure that specifications are correct at the time of publication. All measurements are shown in millimetres. Always use measurements of actual product received for final specification as the technical drawing may contain differences. Please note this product may have a visible printed FIENZA or Watermark logo. Due to printing limitations, physical colour may vary from the image shown. FIENZA reserves the right to make modifications without prior notice.