fienza

KAYA HAND TOWEL RING - GUN METAL

Code	82802GM
Colour	Gun Metal
Material	Stainless Steel & Zinc
Install Type	Wall Mounted

Details

- PVD gun metal
- Circular cover plate
- Super strong 4-point wall mount
- Fully concealed fixings
- Made from stainless steel and zinc

Please note: These products may have a visible Fienza logo marking.

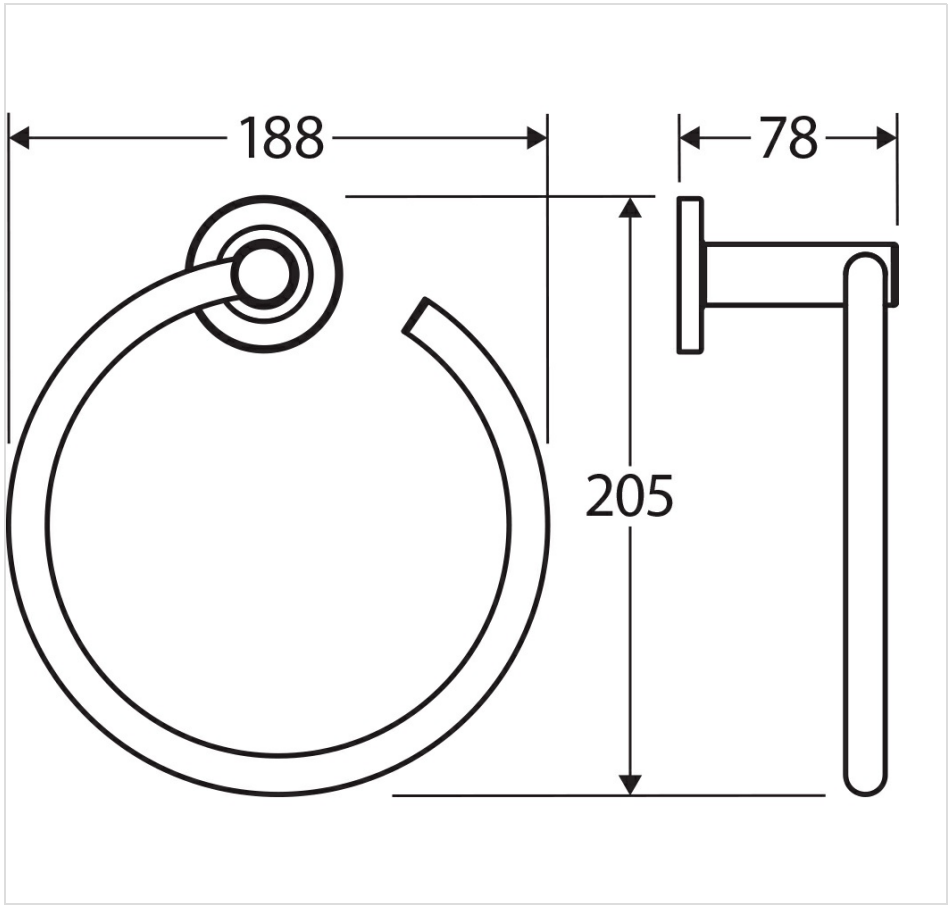



Product/Installation Notes

Hex key not required for installation;

Specifications

Overall Size	188 mm (L) × 78 mm (W) × 205 mm (H)
Weight	0.29 kg
Warranty	Visit: **fienza.com.au/warranty** for more details
WELS Registration	N/A
WELS Flow Rating	N/A

We aim to ensure that specifications are correct at the time of publication. All measurements are shown in millimetres. Always use measurements of actual product received for final specification as the technical drawing may contain differences. Please note this product may have a visible printed FIENZA or Watermark logo. Due to printing limitations, physical colour may vary from the image shown. FIENZA reserves the right to make modifications without prior notice.