fienza

EMPIRE SLIM CURVED TWIN SHOWER - BRUSHED COPPER

Code	455110CO
Colour	Brushed Copper
Material	Brass / Stainless Steel / ABS
Install Type	Wall Mounted

Details

Rail:

- PVD brushed copper finish
- Integrated top water inlet and diverter
- Slider to adjust height of hand shower
- Made from solid brass
- 1.5 metre flexible stainless steel hose (PVC on matte black model)

Starry Overhead Shower (411109CO):

- PVD brushed copper finish
- Thin 8 mm profile
- Easy to clean TPR nozzles
- Made from stainless steel
- Brass swivel joint
- Female 1/2" BSP inlet

Empire Slim Handheld Shower Head (MSH117CO):

- PVD brushed copper finish
- Three water-flow settings: normal, massage or combination
- Easy to clean TPR nozzles
- Made from ABS

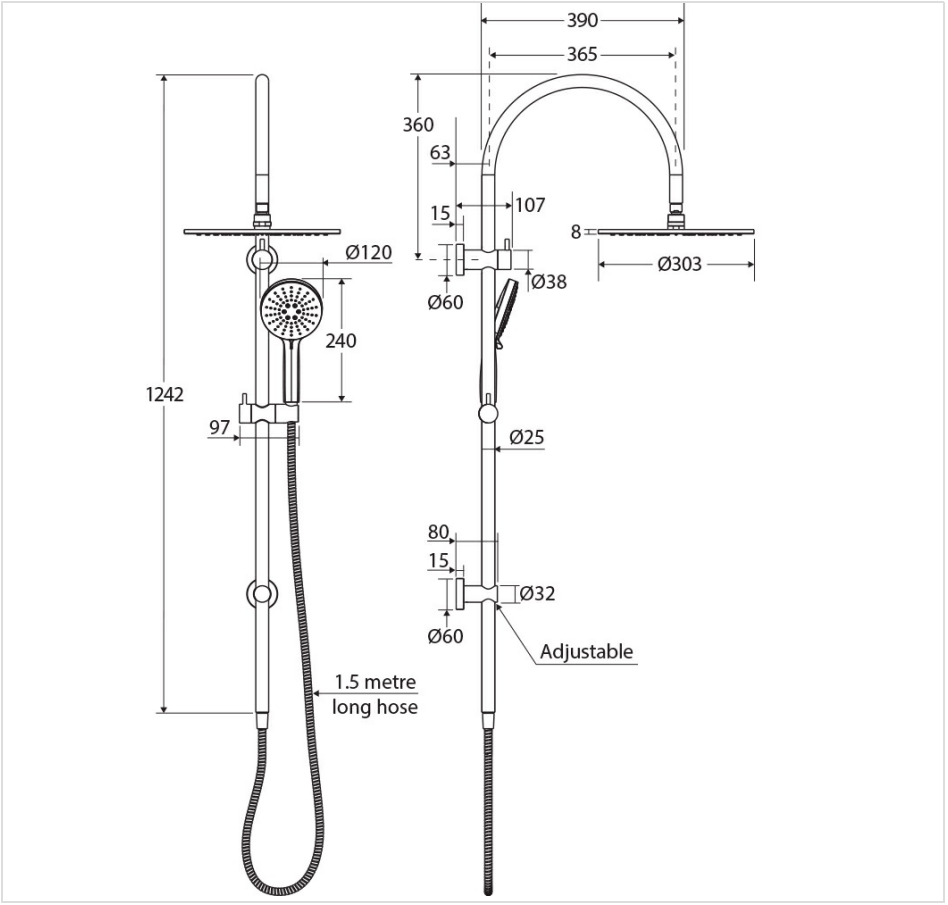



Product/Installation Notes

This product may have a visible Fienza or Watermark logo.

Specifications

Overall Size	
Weight	
Warranty	Visit: **fienza.com.au/warranty** for more details
WELS Registration	S18385
WELS Flow Rating	3 Star, 9L/min (Overhead); 3 Star, 9L/min (Handheld)

We aim to ensure that specifications are correct at the time of publication. All measurements are shown in millimetres. Always use measurements of actual product received for final specification as the technical drawing may contain differences. Please note this product may have a visible printed FIENZA or Watermark logo. Due to printing limitations, physical colour may vary from the image shown. FIENZA reserves the right to make modifications without prior notice.