fienza

LUCIANA CARE INVERTED T RAIL SHOWER - LEFT-HAND

Code	444113LH
Colour	Chrome
Material	Stainless Steel / ABS
Install Type	Wall Mounted

Details

- Chrome finish

Rail:

- Slider to adjust height and angle of hand shower
- Backflow prevention dual check/non-return valve
- Made from stainless steel
- ABS slider
- Deluxe stainless steel elbow
- 1.5 metre stainless steel hose

LUCIANA/KAYA Hand Piece (MSH115)

- Single water-flow setting
- Easy to clean TPR nozzles
- Made from ABS

Please note: This product may have a visible Watermark logo.

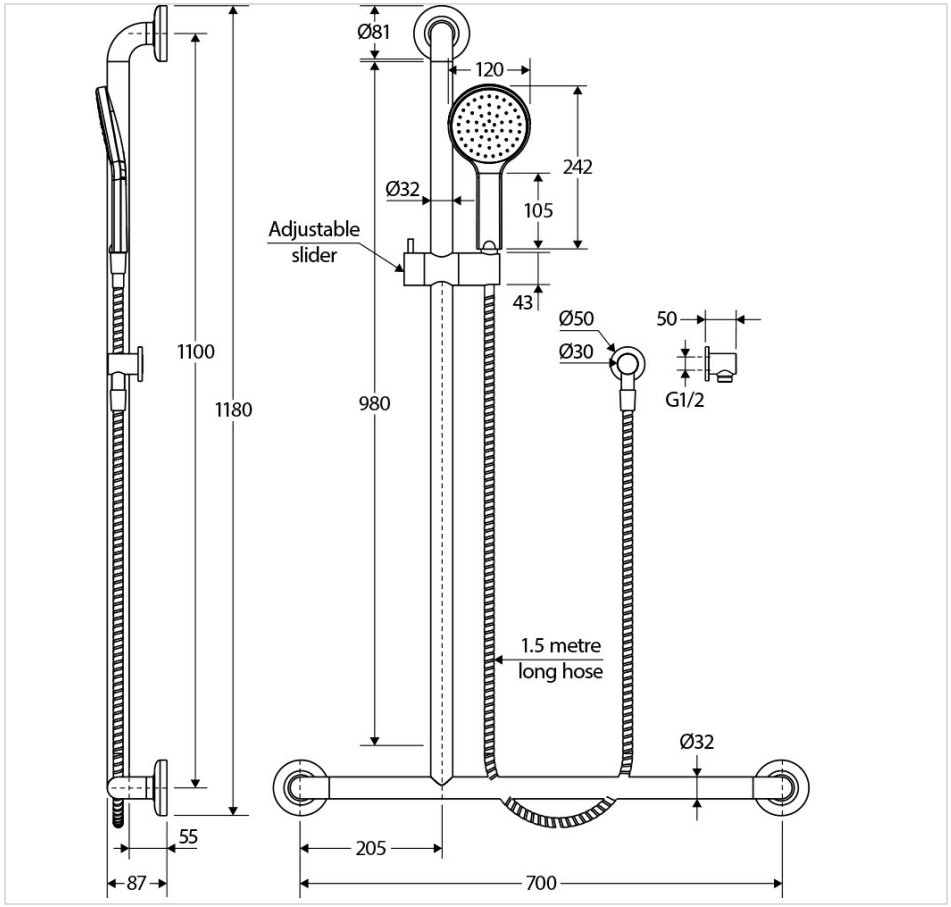



Specifications

Overall Size	
Weight	
Warranty	Visit: **fienza.com.au/warranty** for more details
WELS Registration	S15817
WELS Flow Rating	3 Star, 9L/min

Product/Installation Notes

This product may have a visible Fienza or Watermark logo.

We aim to ensure that specifications are correct at the time of publication. All measurements are shown in millimetres. Always use measurements of actual product received for final specification as the technical drawing may contain differences. Please note this product may have a visible printed FIENZA or Watermark logo. Due to printing limitations, physical colour may vary from the image shown. FIENZA reserves the right to make modifications without prior notice.