fienza

KAYA HAND SHOWER - ROUND PLATE - MATTE WHITE

Code	433201MW
Colour	Matte White
Material	Brass / Stainless Steel / ABS
Install Type	Wall Mounted

Details

- Electroplated matte white finish

Round Plate with Hose (433200MW):

- Designed to complement the shower or bath
- All-in-one water inlet and mounting bracket
- Tilt function
- Made from solid brass
- 1.5 metre stainless steel hose

KAYA Hand Piece (MSH115MW):

- Single water-flow setting
- Easy to clean TPR nozzles
- Made from ABS

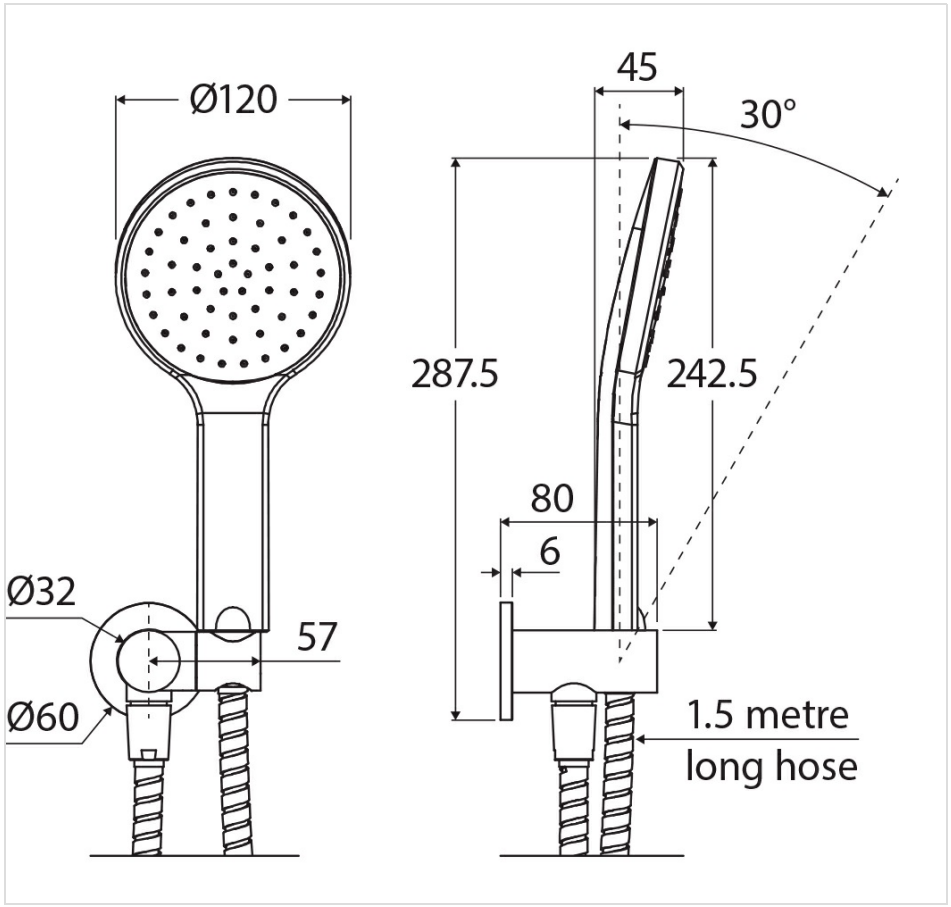



Specifications

Overall Size	
Weight	
Warranty	Visit: **fienza.com.au/warranty** for more details
WELS Registration	S16569
WELS Flow Rating	3 Star, 9L/min

Product/Installation Notes

This product may have a visible Fienza or Watermark logo.

We aim to ensure that specifications are correct at the time of publication. All measurements are shown in millimetres. Always use measurements of actual product received for final specification as the technical drawing may contain differences. Please note this product may have a visible printed FIENZA or Watermark logo. Due to printing limitations, physical colour may vary from the image shown. FIENZA reserves the right to make modifications without prior notice.