UNIVERSAL HAND SHOWER BRACKET & HOSE - RECTANGULAR PLATE - BRUSHED NICKEL

Code	433100BN
Colour	Brushed Nickel
Material	Brass
Install Type	Wall Mounted

Details

Create your own shower! Simply select your bracket and hose, and match to one of 12 hand piece styles.

- Designed to complement the shower or bath
- PVD brushed nickel finish
- Tilt function for hand shower bracket
- All-in-one water inlet and mounting bracket
- Made from solid brass
- 1.5 metre stainless steel flexible hose
- Bracket and hose only - requires hand piece sold separately

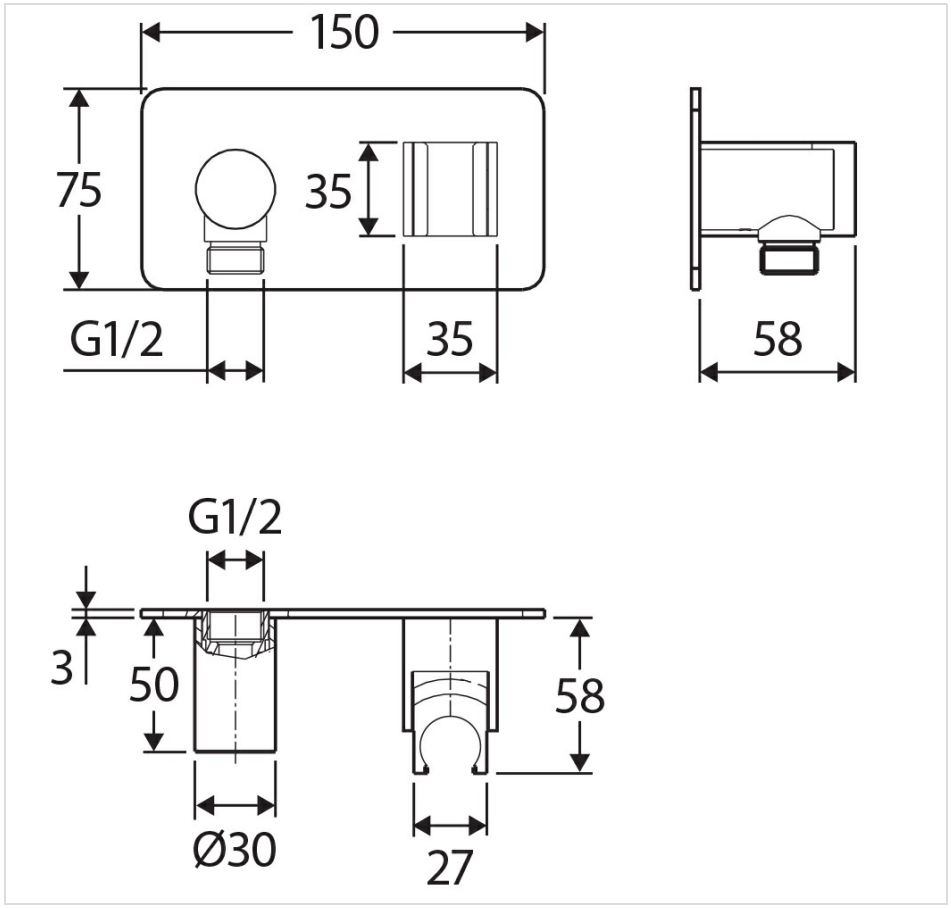



Specifications

Overall Size	150 mm (L) × 58 mm (W) × 75 mm (H)
Weight	1.3 kg
Warranty	Visit: **fienza.com.au/warranty** for more details
WELS Registration	N/A
WELS Flow Rating	N/A

We aim to ensure that specifications are correct at the time of publication. All measurements are shown in millimetres. Always use measurements of actual product received for final specification as the technical drawing may contain differences. Please note this product may have a visible printed FIENZA or Watermark logo. Due to printing limitations, physical colour may vary from the image shown. FIENZA reserves the right to make modifications without prior notice.