fienza

LILLIAN WALL ARM SHOWER SET - URBAN BRASS

Code	411138UB-A
Colour	Urban Brass
Material	Brass
Install Type	Wall Mounted

Details

- PVD urban brass finish
- 208 mm round rain head
- Made from solid brass
- Brass swivel joint
- Female 1/2" BSP inlet

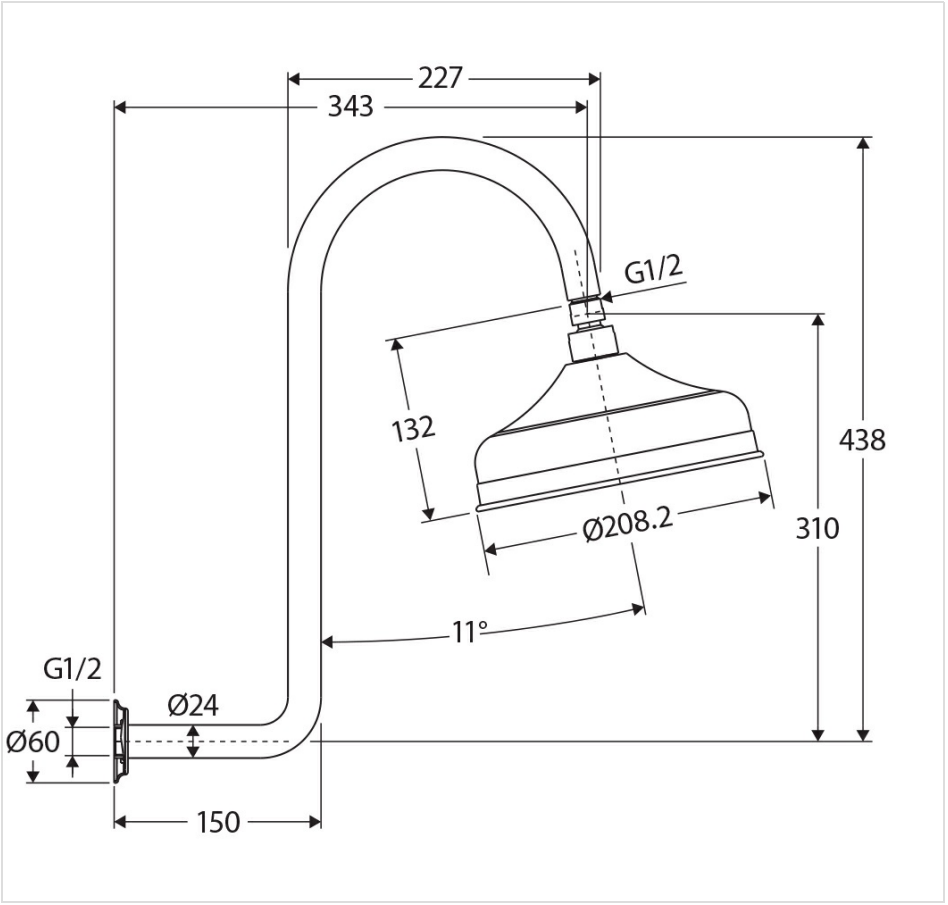



Specifications

Overall Size	
Weight	
Warranty	Visit: **fienza.com.au/warranty** for more details
WELS Registration	S15825
WELS Flow Rating	3 Star, 9L/min

Product/Installation Notes

This product may have a visible Fienza or Watermark logo.

We aim to ensure that specifications are correct at the time of publication. All measurements are shown in millimetres. Always use measurements of actual product received for final specification as the technical drawing may contain differences. Please note this product may have a visible printed FIENZA or Watermark logo. Due to printing limitations, physical colour may vary from the image shown. FIENZA reserves the right to make modifications without prior notice.