fienza

LILLIAN LEVER EXPOSED BATH TAP SET WITH HAND SHOWER - BRUSHED NICKEL

Code	339105NN
Colour	Brushed Nickel
Material	Brass
Install Type	Wall Mounted

Details

- Modern vintage styling
- PVD brushed nickel finish

Rail:

- Separate hold and cold water inlets
- 1/4 turn ceramic disc lever handles
- Made from solid brass
- 1.5 metre stainless steel hose

Lillian Hand Shower (MSH003):

- Single water flow setting
- Made from solid brass
- Female 1/2" BSP inlet

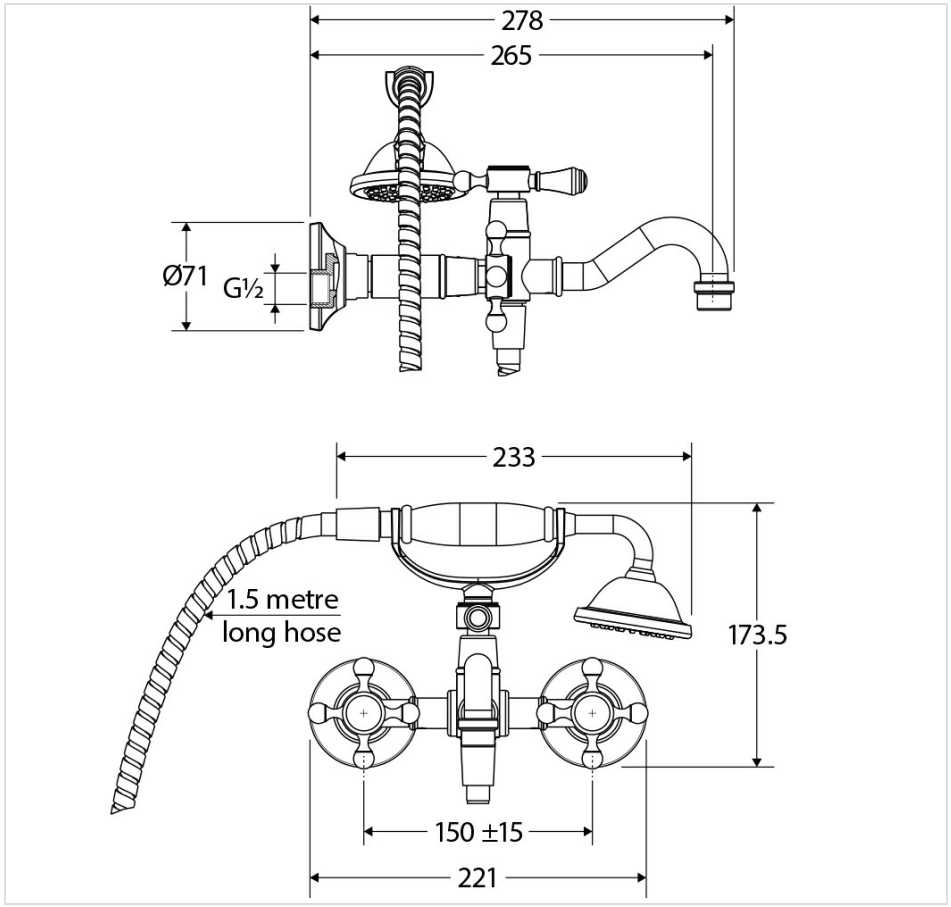



Specifications

Overall Size	221 mm (L) × 278 mm (W) × 173.5 mm (H)
Weight	6.4 kg
Warranty	Visit: **fienza.com.au/warranty** for more details
WELS Registration	S17864
WELS Flow Rating	3 Star rated, 9L/min

Product/Installation Notes

This product may have a visible Fienza or WaterMark logo.

We aim to ensure that specifications are correct at the time of publication. All measurements are shown in millimetres. Always use measurements of actual product received for final specification as the technical drawing may contain differences. Please note this product may have a visible printed FIENZA or Watermark logo. Due to printing limitations, physical colour may vary from the image shown. FIENZA reserves the right to make modifications without prior notice.