fienza

EMPIRE SLIM WALL DIVERTER MIXER - SMALL ROUND PLATES - HORIZONTAL - BRUSHED NICKEL

Code	234112BN-4-LF
Colour	Brushed Nickel
Material	Lead Free Brass
Install Type	Wall Mounted

Details

- PVD brushed nickel finish
- Designed for shower and bath
- High quality European cartridge (35mm)
- Made from lead free stainless steel
- WELS rating not required

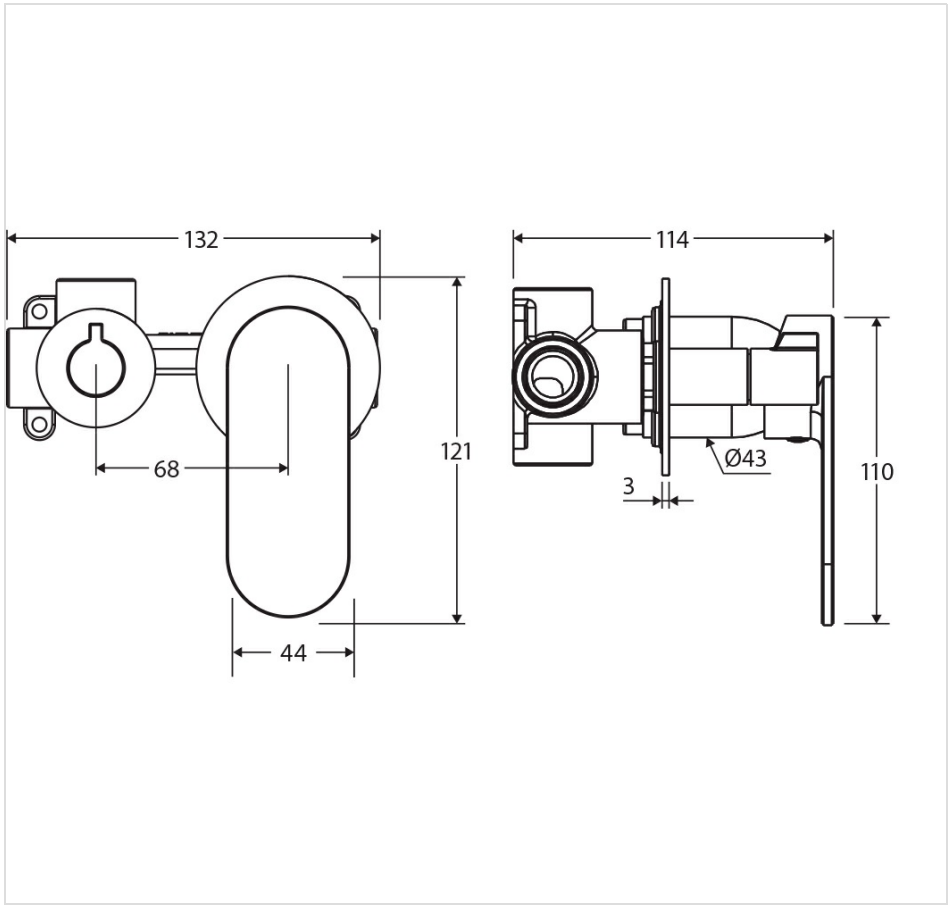



Specifications

Overall Size	132 mm (L) × 114 mm (W) × 121 mm (H)
Weight	1.7 kg
Warranty	Visit: **fienza.com.au/warranty** for more details
WELS Registration	N/A
WELS Flow Rating	N/A

Product/Installation Notes

This product may have a visible Fienza or WaterMark logo.

We aim to ensure that specifications are correct at the time of publication. All measurements are shown in millimetres. Always use measurements of actual product received for final specification as the technical drawing may contain differences. Please note this product may have a visible printed FIENZA or Watermark logo. Due to printing limitations, physical colour may vary from the image shown. FIENZA reserves the right to make modifications without prior notice.