fienza

EMPIRE SLIM PULL OUT SINK MIXER - GUN METAL

Code	234108GM-LF
Colour	Gun Metal
Material	Lead Free Brass
Install Type	Bench Mounted

Details

- PVD gun metal finish
- Designed for kitchen and laundry
- Extended arch outlet
- Pull-out nozzle (max. reach 430 mm)
- Two water flow settings: normal and spray
- Swivel function
- High quality European cartridge (35mm)
- Made from lead free stainless steel

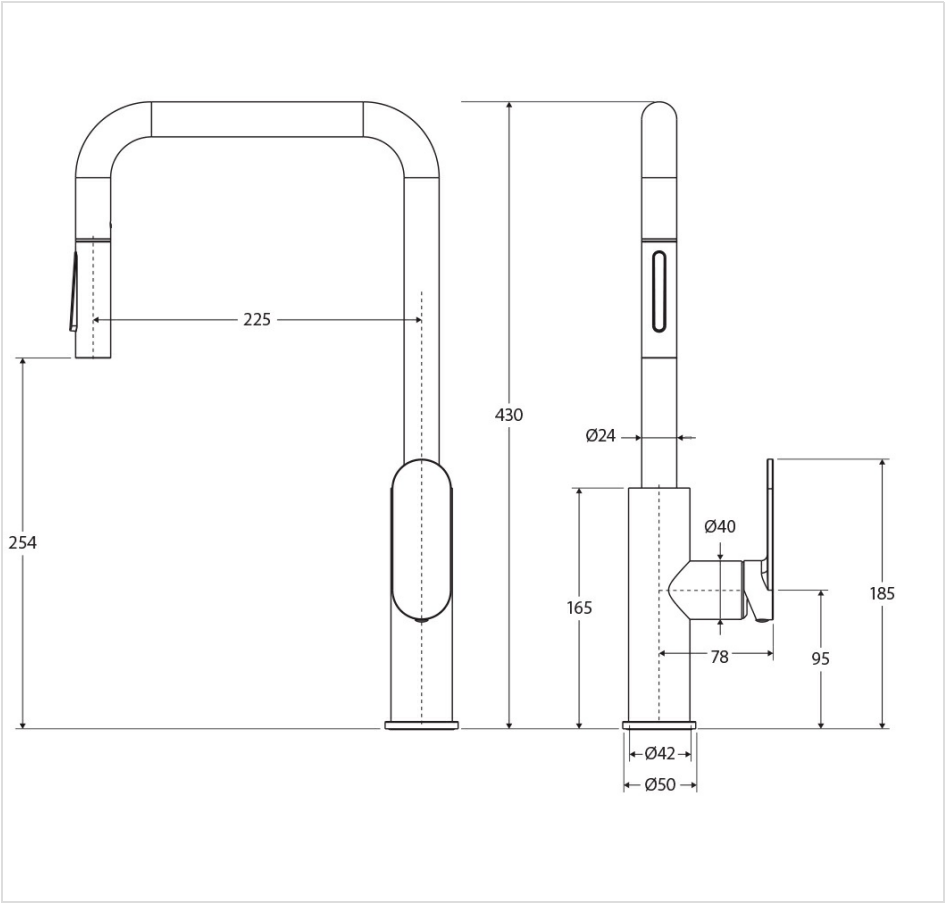



Product/Installation Notes

This product may have a visible Fienza or WaterMark logo.

Specifications

Overall Size	50 mm (L) × 275 mm (W) × 430 mm (H)
Weight	2.8 kg
Warranty	Visit: **fienza.com.au/warranty** for more details
WELS Registration	T44908
WELS Flow Rating	6 Star rated, 3.5L/min

We aim to ensure that specifications are correct at the time of publication. All measurements are shown in millimetres. Always use measurements of actual product received for final specification as the technical drawing may contain differences. Please note this product may have a visible printed FIENZA or Watermark logo. Due to printing limitations, physical colour may vary from the image shown. FIENZA reserves the right to make modifications without prior notice.