fienza

EMPIRE SLIM COLD START TALL BASIN MIXER - MATTE BLACK

Code	234107B-LF
Colour	Matte Black
Material	Lead Free Brass
Install Type	Bench Mounted

Details

- Electroplated matte black finish
- Slim round outlet
- Swivel aerator
- Cold start cartridge technology (25mm)
- Made from lead-free brass*

*Defined as containing less than 0.25% lead.

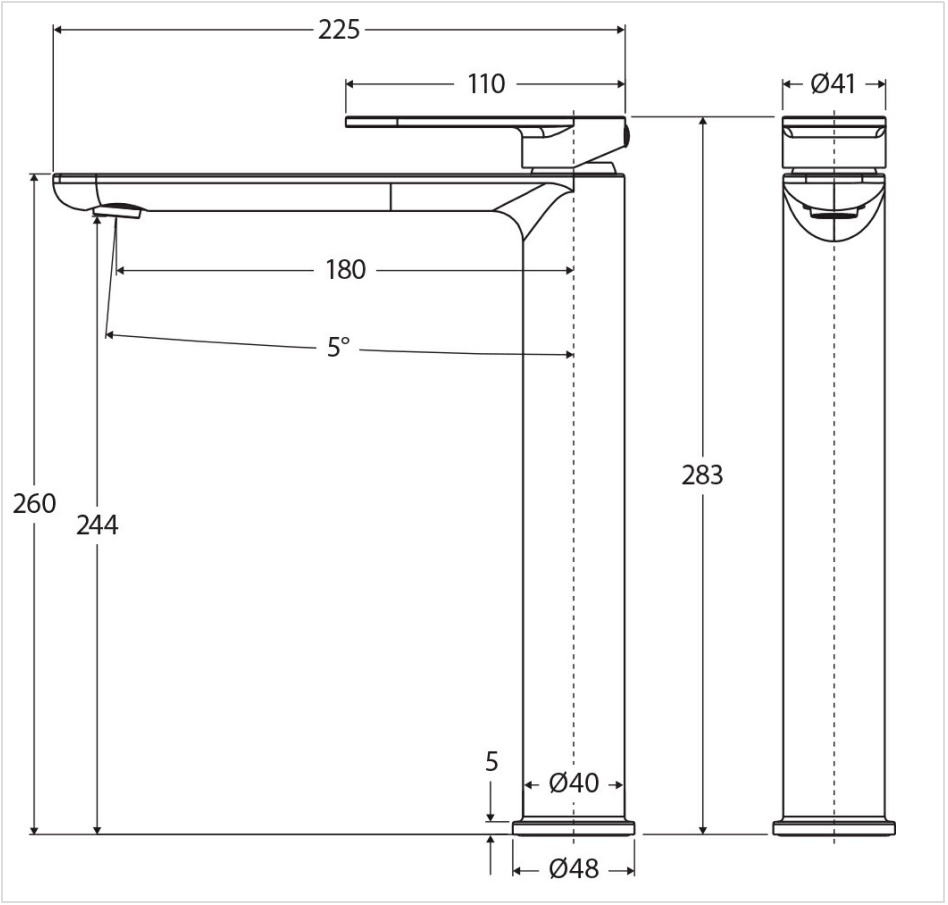



Specifications

Overall Size	48 mm (L) × 225 mm (W) × 283 mm (H)
Weight	2.15 kg
Warranty	Visit: **fienza.com.au/warranty** for more details
WELS Registration	T43830
WELS Flow Rating	6 Star rated, 3.5L/min

Product/Installation Notes

This product may have a visible Fienza or WaterMark logo.

We aim to ensure that specifications are correct at the time of publication. All measurements are shown in millimetres. Always use measurements of actual product received for final specification as the technical drawing may contain differences. Please note this product may have a visible printed FIENZA or Watermark logo. Due to printing limitations, physical colour may vary from the image shown. FIENZA reserves the right to make modifications without prior notice.