fienza

EMPIRE SLIM BASIN/BATH WALL MIXER SET - OVAL PLATE - 160MM SPOUT - MATTE BLACK

Code	234106B-LF
Colour	Matte Black
Material	Lead Free Brass
Install Type	Wall Mounted

Details

- Electroplated matte black finish
- Slim, rounded outlet
- Swivel basin aerator
- Free flow aerator included for bath installation
- High quality European cartridge (35mm)
- Made from lead-free brass* and stainless steel

*Defined as containing less than 0.25% lead.

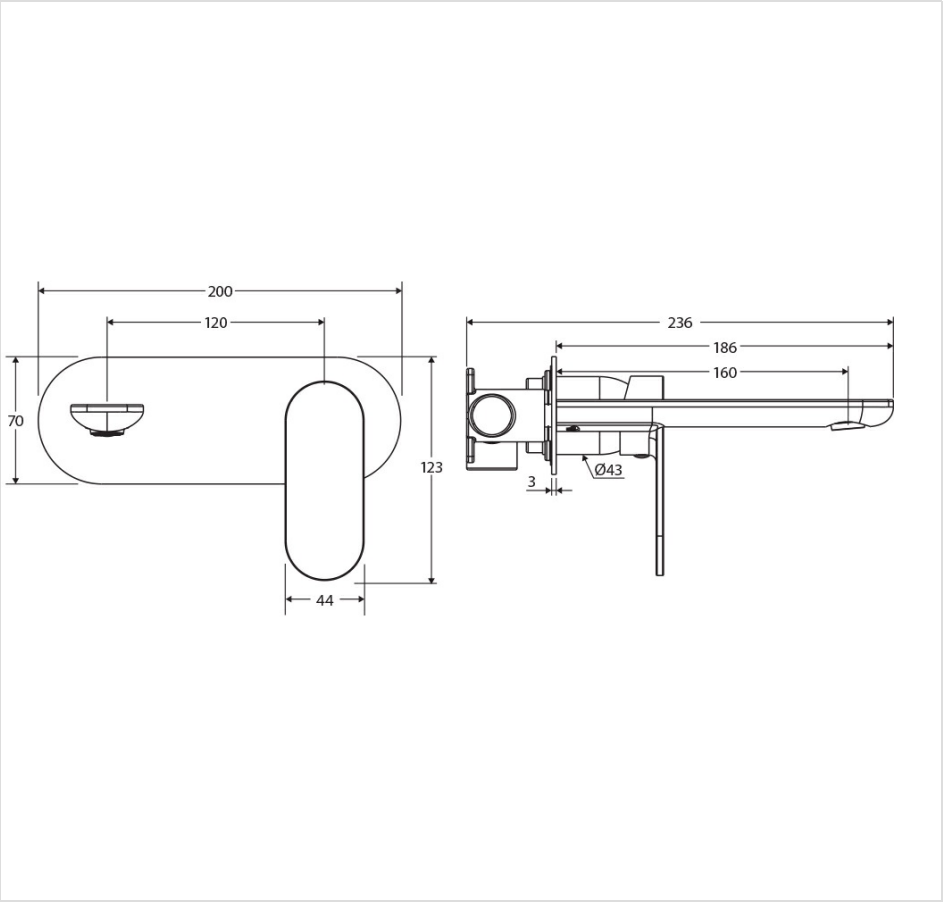



Product/Installation Notes

This product may have a visible Fienza or WaterMark logo.

Specifications

Overall Size	200 mm (L) × 236 mm (W) × 123 mm (H)
Weight	1.87 kg
Warranty	Visit: **fienza.com.au/warranty** for more details
WELS Registration	T43831
WELS Flow Rating	6 Star rated, 4L/min when installed over basin

We aim to ensure that specifications are correct at the time of publication. All measurements are shown in millimetres. Always use measurements of actual product received for final specification as the technical drawing may contain differences. Please note this product may have a visible printed FIENZA or Watermark logo. Due to printing limitations, physical colour may vary from the image shown. FIENZA reserves the right to make modifications without prior notice.