fienza

TONO SWIVEL BATH SPOUT - MATTE BLACK

Code	233117B
Colour	Matte Black
Material	Lead Free Brass
Install Type	Wall Mounted

Details

- 180° swivel function
- Wall mounted
- Fitted with aerator
- Electroplated matte black finish
- Push-fit installation
- Made from lead-free brass*
- Female 1/2" BSPP inlet

*Defined as containing less than 0.25% lead.

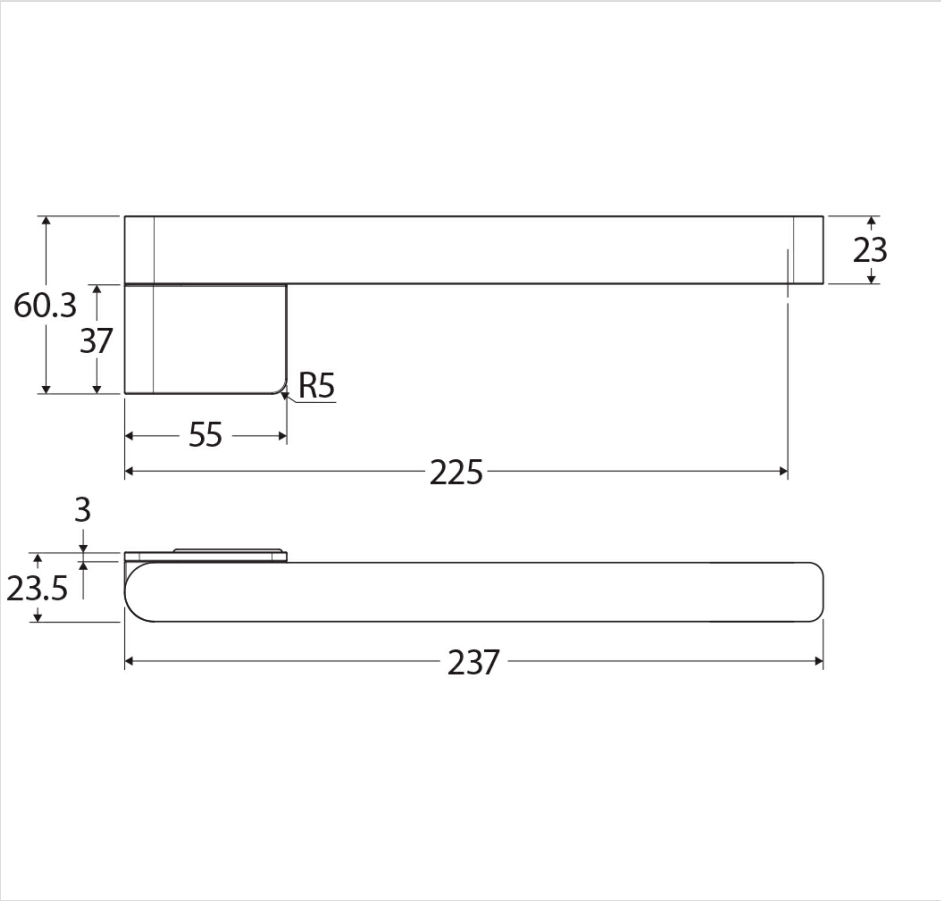



Specifications

Overall Size	237 mm (L) × 23.5 mm (W) × 60.3 mm (H)
Weight	
Warranty	Visit: **fienza.com.au/warranty** for more details
WELS Registration	N/A
WELS Flow Rating	N/A

Product/Installation Notes

Please note this product may have a visible printed Fienza or Watermark logo.

We aim to ensure that specifications are correct at the time of publication. All measurements are shown in millimetres. Always use measurements of actual product received for final specification as the technical drawing may contain differences. Please note this product may have a visible printed FIENZA or Watermark logo. Due to printing limitations, physical colour may vary from the image shown. FIENZA reserves the right to make modifications without prior notice.