fienza

TONO SWIVEL BATH SPOUT - CHROME

Code	233117
Colour	Chrome
Material	Lead Free Brass
Install Type	Wall Mounted

Details

- 180° swivel function
- Wall mounted
- Fitted with aerator
- Chrome finish
- Push-fit installation
- Made from lead-free brass*
- Female 1/2" BSPP inlet

*Defined as containing less than 0.25% lead.

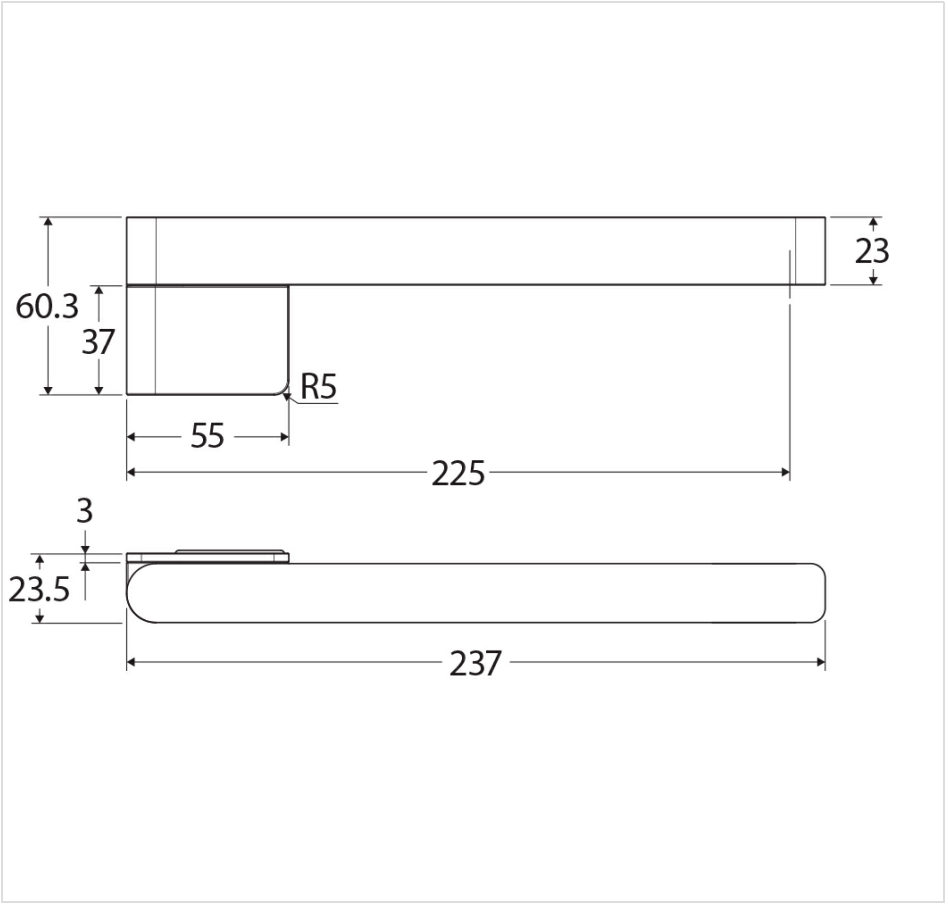



Product/Installation Notes

Please note this product may have a visible printed Fienza or Watermark logo.

Specifications

Overall Size	237 mm (L) × 23.5 mm (W) × 60.3 mm (H)
Weight	
Warranty	Visit: **fienza.com.au/warranty** for more details
WELS Registration	N/A
WELS Flow Rating	N/A

We aim to ensure that specifications are correct at the time of publication. All measurements are shown in millimetres. Always use measurements of actual product received for final specification as the technical drawing may contain differences. Please note this product may have a visible printed FIENZA or Watermark logo. Due to printing limitations, physical colour may vary from the image shown. FIENZA reserves the right to make modifications without prior notice.