fienza

TONO MEDIUM BASIN MIXER - GUN METAL

Code	233110GM
Colour	Gun Metal
Material	Lead Free Brass
Install Type	Bench Mounted

Details

- Soft square outlet
- PVD gun metal finish
- Swivel aerator
- High quality European cartridge (25 mm)
- PEX split-resistant hoses
- Made from lead-free brass*

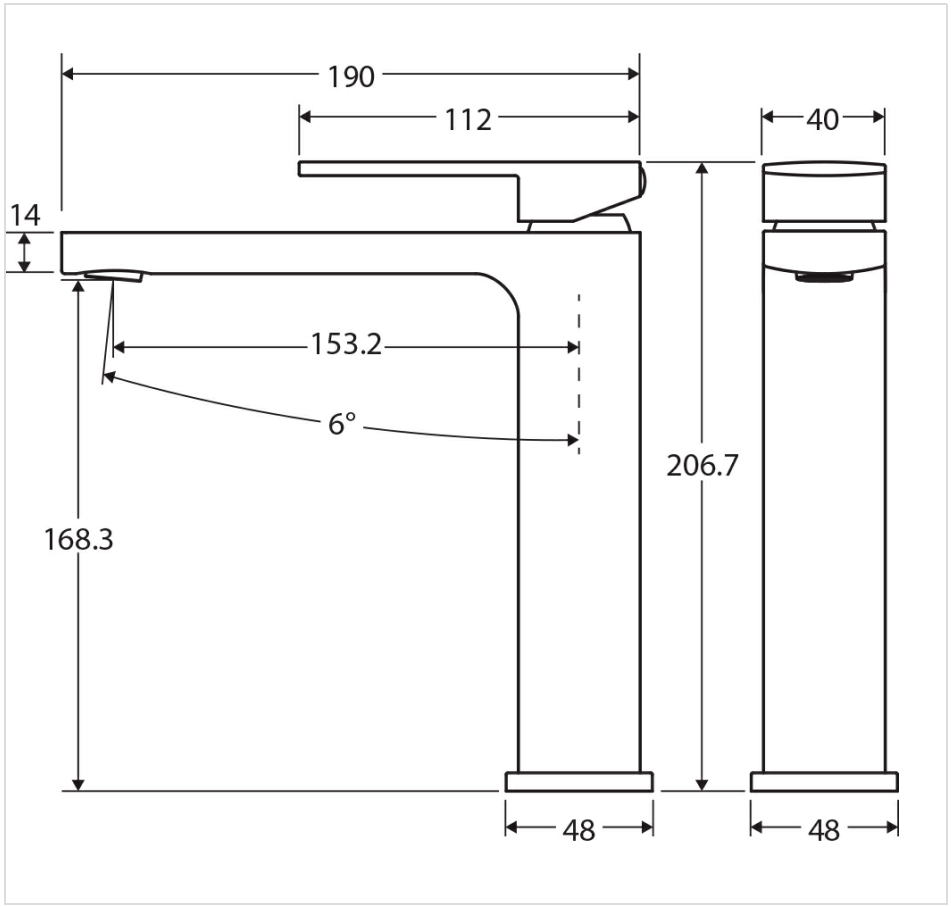



Specifications

Overall Size	48 mm (L) × 190 mm (W) × 206.7 mm (H)
Weight	
Warranty	Visit: **fienza.com.au/warranty** for more details
WELS Registration	T41439
WELS Flow Rating	6 Star rated, 4.5L/min

Product/Installation Notes

This product may have a visible Fienza or WaterMark logo.

We aim to ensure that specifications are correct at the time of publication. All measurements are shown in millimetres. Always use measurements of actual product received for final specification as the technical drawing may contain differences. Please note this product may have a visible printed FIENZA or Watermark logo. Due to printing limitations, physical colour may vary from the image shown. FIENZA reserves the right to make modifications without prior notice.