TONO BASIN/BATH WALL MIXER SET - RECTANGULAR PLATE - 160MM SPOUT - BRUSHED NICKEL

Code	233106BN-LF
Colour	Brushed Nickel
Material	Lead Free Brass & Stainless Steel
Install Type	Wall Mounted

Details

- Soft square outlet
- Swivel basin aerator
- PVD brushed nickel finish
- Free-flow aerator included for bath installation
- High quality European cartridge (35 mm)
- Made from lead-free brass*

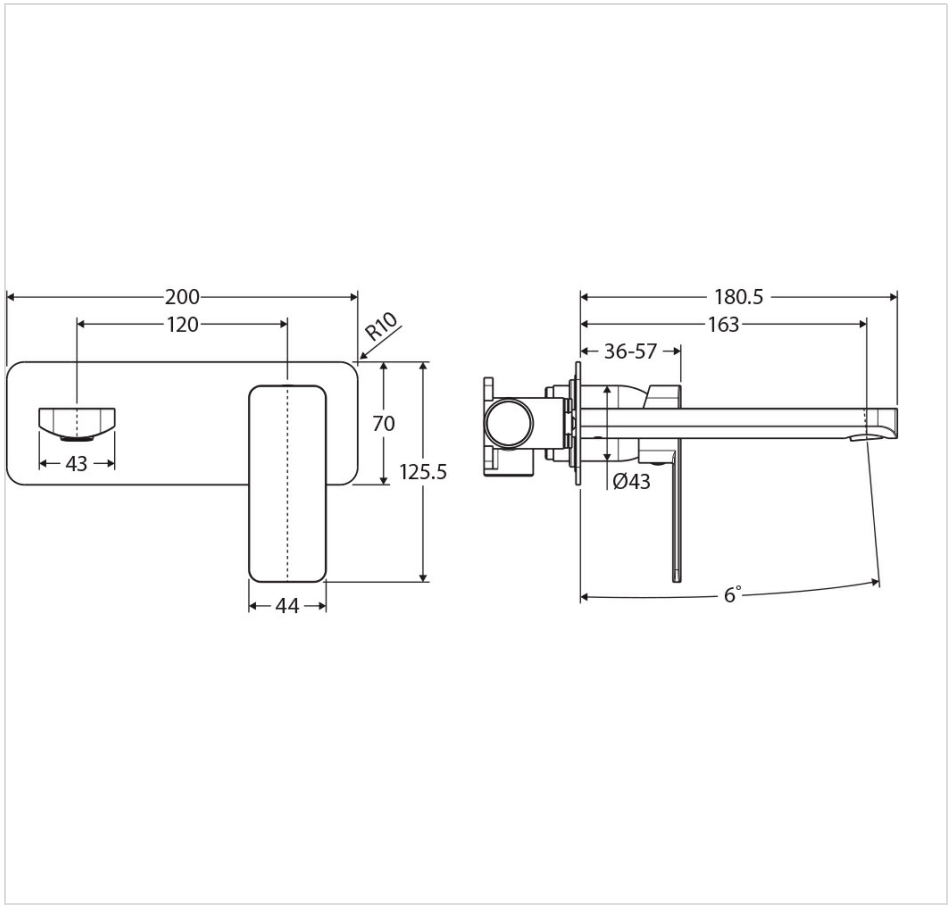



Product/Installation Notes

This product may have a visible Fienza or WaterMark logo.

Specifications

Overall Size	200 mm (L) × 180.5 mm (W) × 125.5 mm (H)
Weight	
Warranty	Visit: **fienza.com.au/warranty** for more details
WELS Registration	T41981
WELS Flow Rating	6 Star rated, 4.5L/min when installed over basin

We aim to ensure that specifications are correct at the time of publication. All measurements are shown in millimetres. Always use measurements of actual product received for final specification as the technical drawing may contain differences. Please note this product may have a visible printed FIENZA or Watermark logo. Due to printing limitations, physical colour may vary from the image shown. FIENZA reserves the right to make modifications without prior notice.