fienza

TONO SINK MIXER - BRUSHED NICKEL

Code	233105BN-LF
Colour	Brushed Nickel
Material	Lead Free Brass & Stainless Steel
Install Type	Bench Mounted

Details

- Designed for kitchen and laundry
- Extended arch outlet
- PVD brushed nickel finish
- Swivel function
- High quality European cartridge (25 mm)
- PEX split-resistant hoses
- Made from lead free brass and stainless steel

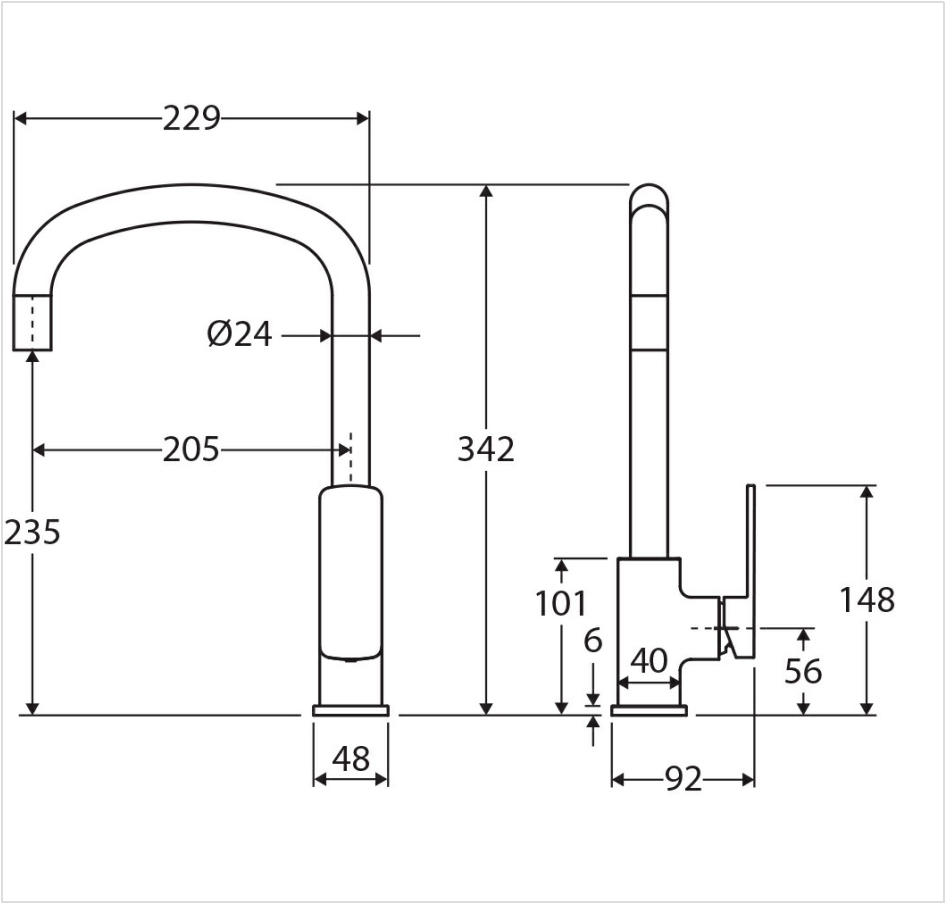



Product/Installation Notes

This product may have a visible Fienza or WaterMark logo.

Specifications

Overall Size	92 mm (L) × 229 mm (W) × 342 mm (H)
Weight	
Warranty	Visit: **fienza.com.au/warranty** for more details
WELS Registration	T41441
WELS Flow Rating	6 Star rated, 4.5L/min

We aim to ensure that specifications are correct at the time of publication. All measurements are shown in millimetres. Always use measurements of actual product received for final specification as the technical drawing may contain differences. Please note this product may have a visible printed FIENZA or Watermark logo. Due to printing limitations, physical colour may vary from the image shown. FIENZA reserves the right to make modifications without prior notice.