fienza

# TONO WALL MIXER - RECTANGULAR PLATE - GUN METAL

| | |
|---|---|
| **Code** | 233101GM-LF |
| **Colour** | Gun Metal |
| **Material** | Lead Free Stainless Steel |
| **Install Type** | Wall Mounted |

## Details

- Designed for shower and bath
- PVD gun metal finish
- High quality European cartridge (35 mm)
- Made from lead-free brass*

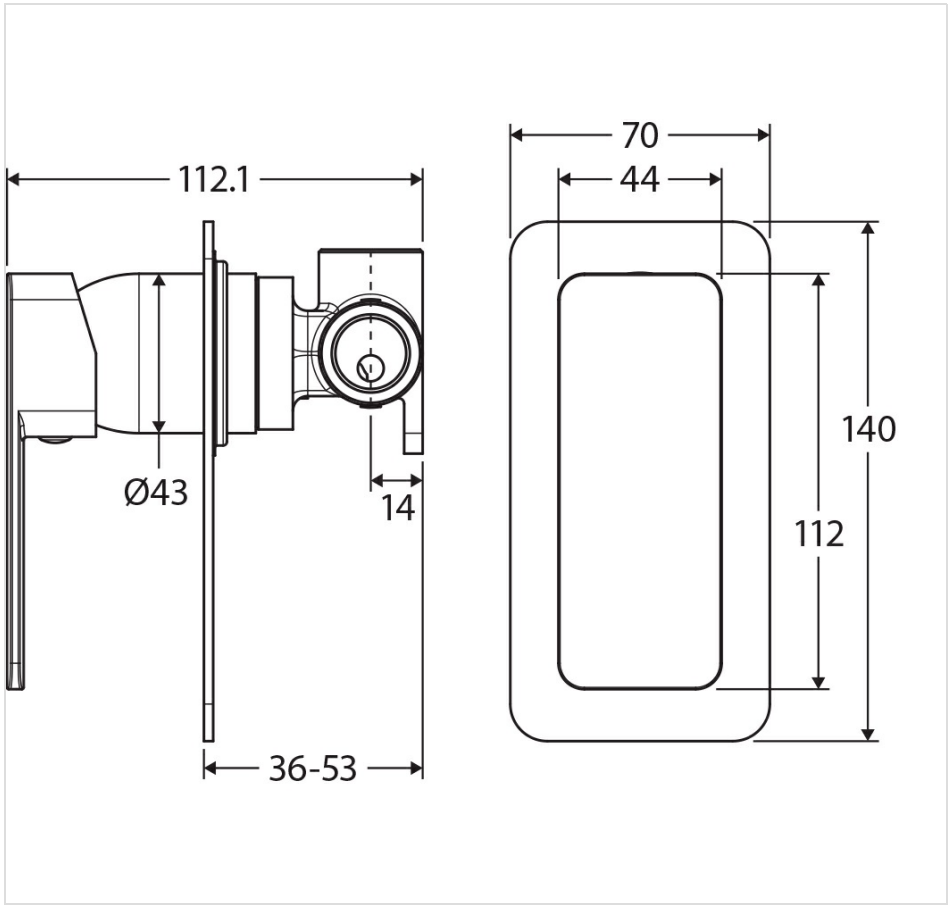





## Specifications

| | |
|---|---|
| **Overall Size** | 70 mm (L) × 112.1 mm (W) × 140 mm (H) |
| **Weight** | |
| **Warranty** | Visit: **fienza.com.au/warranty** for more details |
| **WELS Registration** | N/A |
| **WELS Flow Rating** | N/A |

## Product/Installation Notes

This product may have a visible Fienza or WaterMark logo.

We aim to ensure that specifications are correct at the time of publication. All measurements are shown in millimetres. Always use measurements of actual product received for final specification as the technical drawing may contain differences. Please note this product may have a visible printed FIENZA or Watermark logo. Due to printing limitations, physical colour may vary from the image shown. FIENZA reserves the right to make modifications without prior notice.