fienza

KAYA BASIN HOB SPOUT - MATTE WHITE

Code	228111MW
Colour	Matte White
Material	Brass
Install Type	Hob Mounted

Details

- Electroplated matte white finish
- Hob mounted, fixed position
- For use as a bath outlet, a free flow aerator can be purchased if required (206543-FF)
- Made from solid brass
- Male 1/2" BSPP inlet

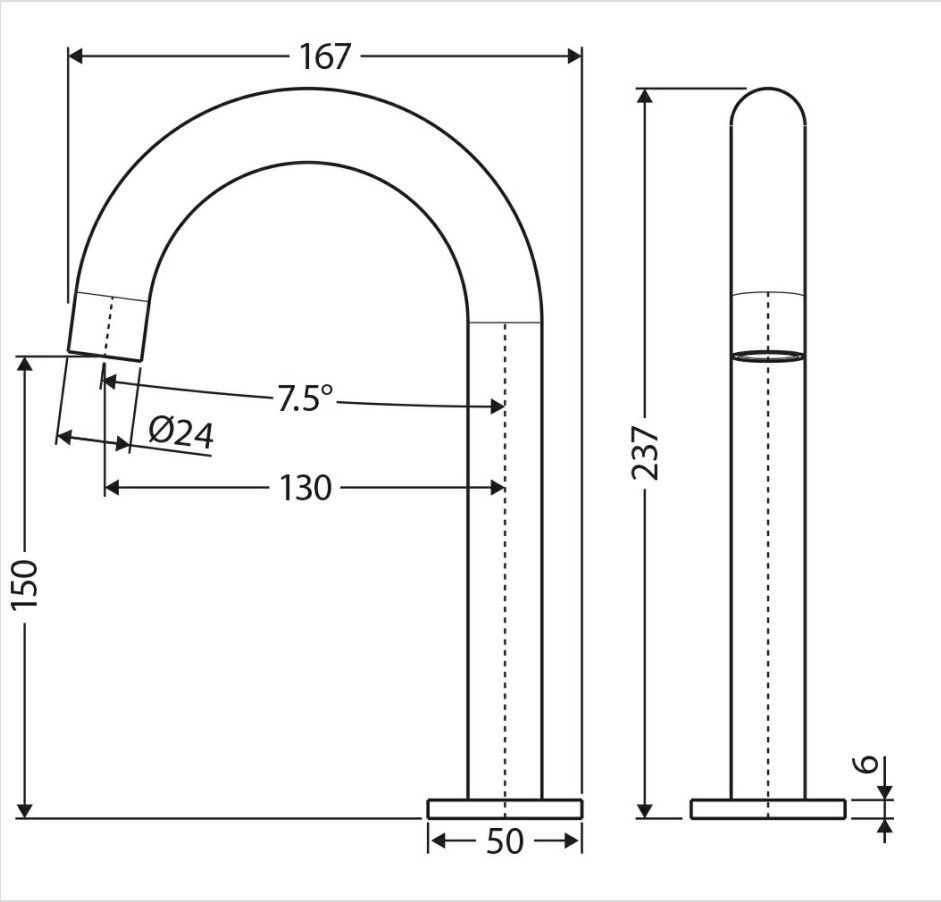



Specifications

Overall Size	167 mm (L) × 50 mm (W) × 237 mm (H)
Weight	
Warranty	Visit: **fienza.com.au/warranty** for more details
WELS Registration	T36678
WELS Flow Rating	5 Star, 5L/min when installed over basin

Product/Installation Notes

Please note this product may have a visible printed Fienza or Watermark logo.

We aim to ensure that specifications are correct at the time of publication. All measurements are shown in millimetres. Always use measurements of actual product received for final specification as the technical drawing may contain differences. Please note this product may have a visible printed FIENZA or Watermark logo. Due to printing limitations, physical colour may vary from the image shown. FIENZA reserves the right to make modifications without prior notice.