fienza

# KAYA MEDIUM BASIN MIXER - BRUSHED COPPER

| | |
|---|---|
| **Code** | 228110CO-LF |
| **Colour** | Brushed Copper |
| **Material** | Lead Free Stainless Steel |
| **Install Type** | Bench Mounted |

## Details

- PVD brushed copper finish
- Round, pin lever handle design
- Curved outlet
- High quality European cartridge (25mm)
- PEX split-resistant hoses
- Made from lead free stainless steel

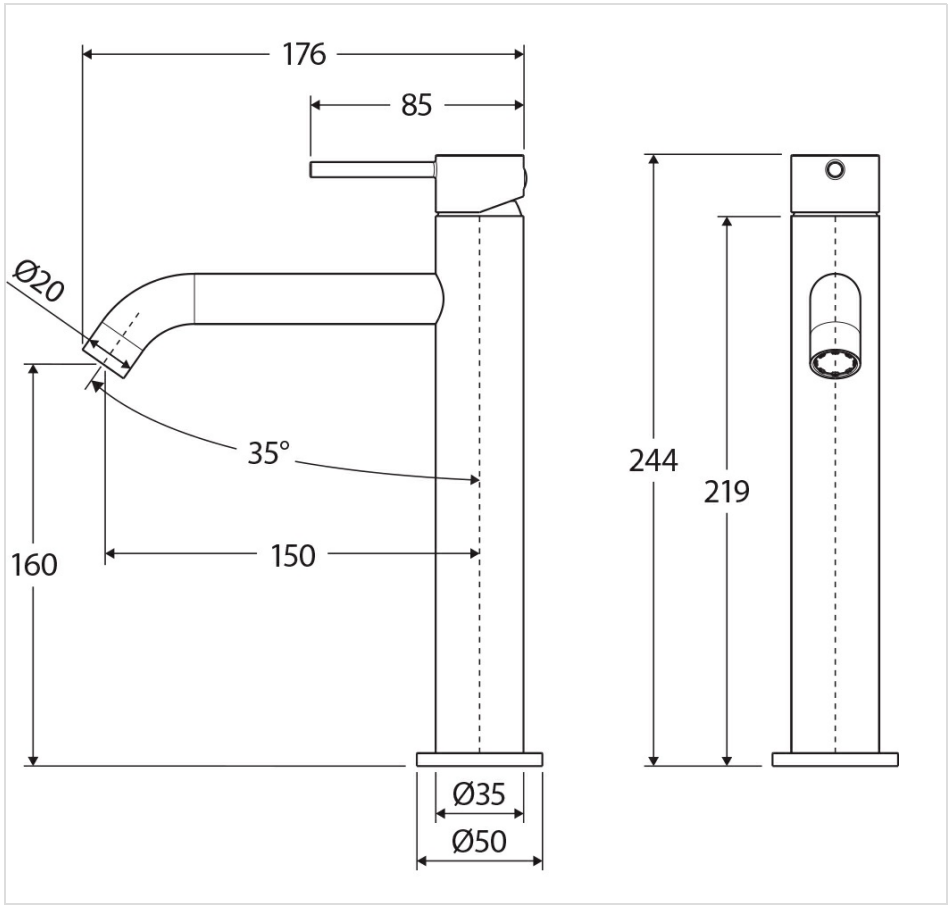


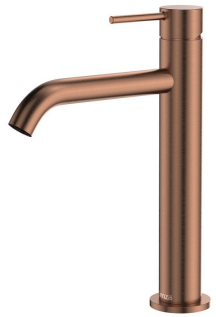

## Product/Installation Notes

This product may have a visible Fienza or WaterMark logo.

## Specifications

| | |
|---|---|
| **Overall Size** | 50 mm (L) × 176 mm (W) × 244 mm (H) |
| **Weight** | 1.32 kg |
| **Warranty** | Visit: **fienza.com.au/warranty** for more details |
| **WELS Registration** | T41217 |
| **WELS Flow Rating** | 5 Star rated, 5L/min |

We aim to ensure that specifications are correct at the time of publication. All measurements are shown in millimetres. Always use measurements of actual product received for final specification as the technical drawing may contain differences. Please note this product may have a visible printed FIENZA or Watermark logo. Due to printing limitations, physical colour may vary from the image shown. FIENZA reserves the right to make modifications without prior notice.