fienza

KAYA PULL DOWN SINK MIXER - MATTE WHITE

Code	228109MWW-LF
Colour	Matte White
Material	Lead Free Stainless Steel
Install Type	Bench Mounted

Details

- Electroplated matte white finish
- Designed for kitchen and laundry
- Detachable hose for greater reach
- Magnetic cradle holds nozzle in place
- Two water flow settings: normal and spray
- Round, pin lever handle design
- Swivel function
- Made from lead free stainless steel
- High quality European cartridge (25mm)
- PEX split-resistant hoses

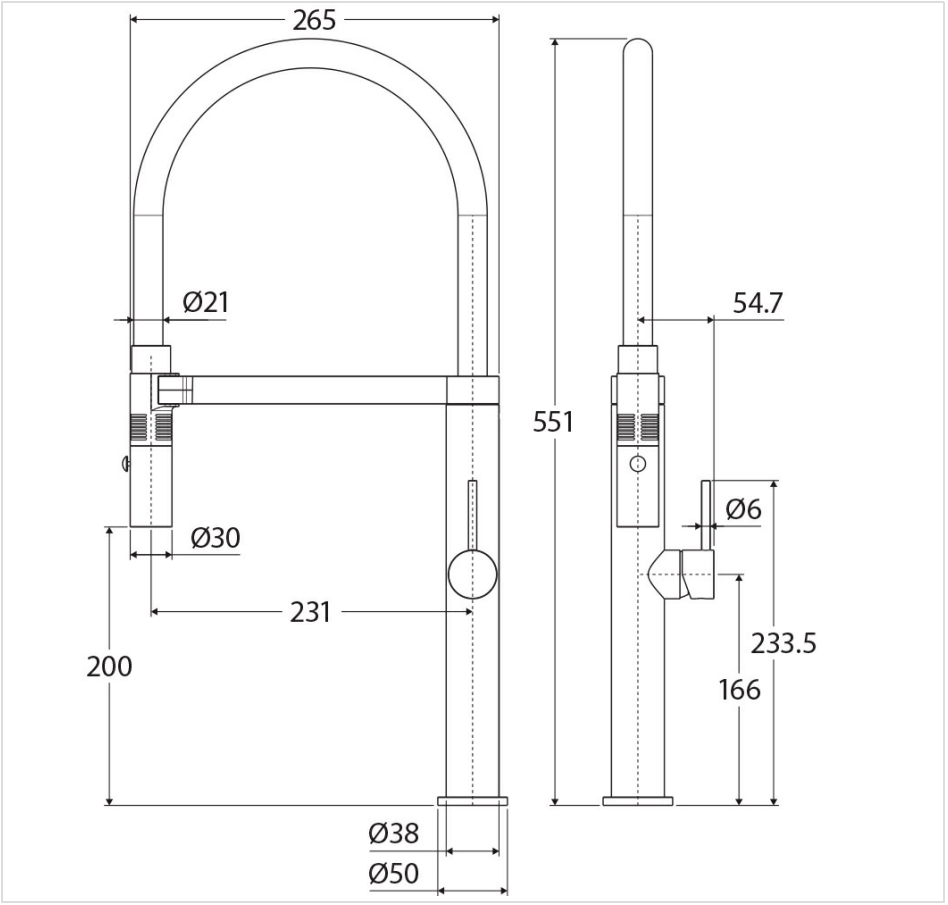



Specifications

Overall Size	50 mm (L) × 265 mm (W) × 551 mm (H)
Weight	3.04 kg
Warranty	Visit: **fienza.com.au/warranty** for more details
WELS Registration	T36507
WELS Flow Rating	6 Star rated, 4.5L/min

Product/Installation Notes

This product may have a visible Fienza or WaterMark logo.

We aim to ensure that specifications are correct at the time of publication. All measurements are shown in millimetres. Always use measurements of actual product received for final specification as the technical drawing may contain differences. Please note this product may have a visible printed FIENZA or Watermark logo. Due to printing limitations, physical colour may vary from the image shown. FIENZA reserves the right to make modifications without prior notice.