fienza

KAYA PULL OUT SINK MIXER - GUN METAL

Code	228108GM-LF
Colour	Gun Metal
Material	Lead Free Stainless Steel
Install Type	Bench Mounted

Details

- PVD gun metal
- Designed for kitchen and laundry
- Pull-out nozzle - maximum reach: 430mm
- Two water flow settings: normal and spray
- Round, pin lever handle design
- Gooseneck outlet
- Swivel function
- High quality European cartridge (25mm)
- PEX split-resistant hoses
- Made from lead free stainless steel

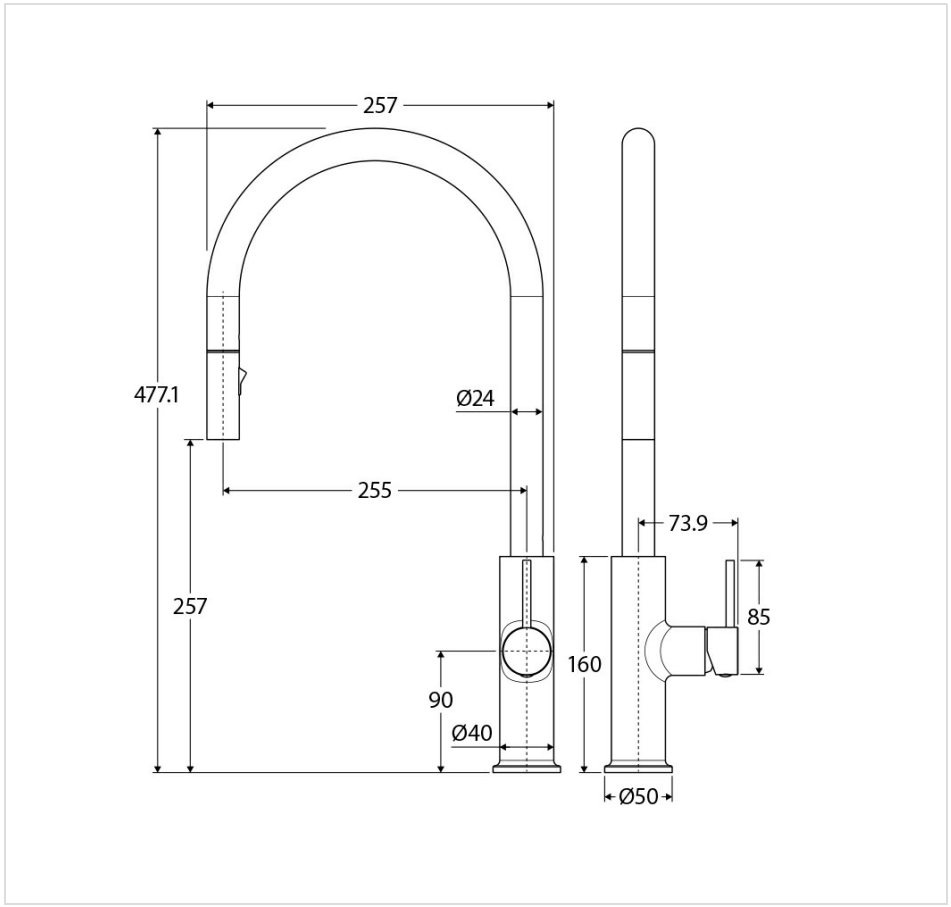



Specifications

Overall Size	50 mm (L) × 257 mm (W) × 477.1 mm (H)
Weight	2.57 kg
Warranty	Visit: **fienza.com.au/warranty** for more details
WELS Registration	T40043
WELS Flow Rating	6 Star rated, 4.5L/min

Product/Installation Notes

This product may have a visible Fienza or WaterMark logo.

We aim to ensure that specifications are correct at the time of publication. All measurements are shown in millimetres. Always use measurements of actual product received for final specification as the technical drawing may contain differences. Please note this product may have a visible printed FIENZA or Watermark logo. Due to printing limitations, physical colour may vary from the image shown. FIENZA reserves the right to make modifications without prior notice.