fienza

KAYA BASIN/BATH WALL MIXER SET - RECTANGULAR PLATE - 160MM SPOUT - BRUSHED COPPER

Code	228106CO-LF
Colour	Brushed Copper
Material	Lead Free Brass & Stainless Steel
Install Type	Wall Mounted

Details

- PVD brushed copper finish
- Designed for basin and bath
- Round, pin lever handle
- Curved outlet
- Free flow aerator included for bath installation
- Made from lead free brass and stainless steel
- High quality European cartridge (35mm)

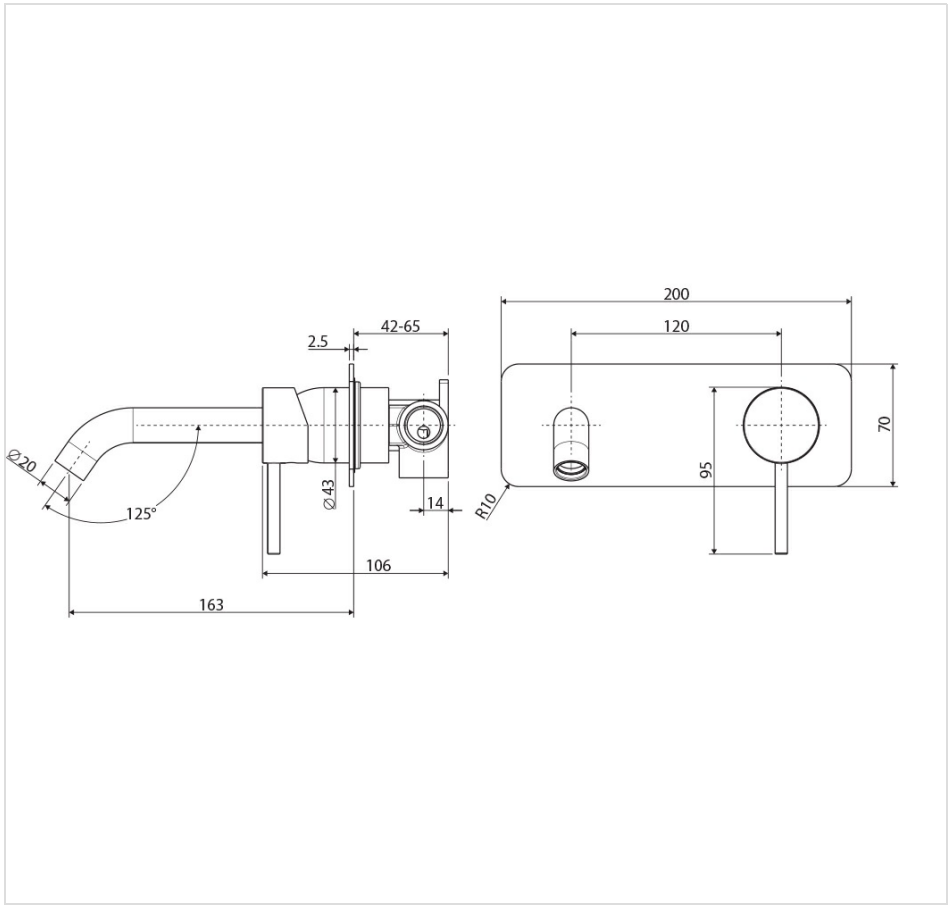

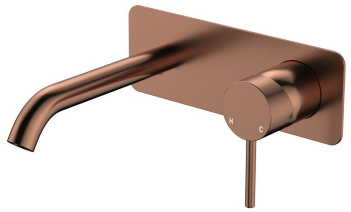

Specifications

Overall Size	200 mm (L) × 163 mm (W) × 70 mm (H)
Weight	
Warranty	Visit: **fienza.com.au/warranty** for more details
WELS Registration	T37313
WELS Flow Rating	5 Star rated, 5L/min when installed over basin

Product/Installation Notes

This product may have a visible Fienza or WaterMark logo.

We aim to ensure that specifications are correct at the time of publication. All measurements are shown in millimetres. Always use measurements of actual product received for final specification as the technical drawing may contain differences. Please note this product may have a visible printed FIENZA or Watermark logo. Due to printing limitations, physical colour may vary from the image shown. FIENZA reserves the right to make modifications without prior notice.