fienza

KAYA CARE BASIN MIXER - CHROME

Code	228103D-LF
Colour	Chrome
Material	Lead Free Stainless Steel
Install Type	Bench Mounted

Details

- Electroplated chrome finish
- Can be installed for AS 1428.1:2021 Accessible Compliance
- Long handle for easy reach and operation
- Large red and blue indicators for hot and cold markings
- Made from lead free stainless steel
- High quality European cartridge (25 mm)
- PEX split-resistant hoses

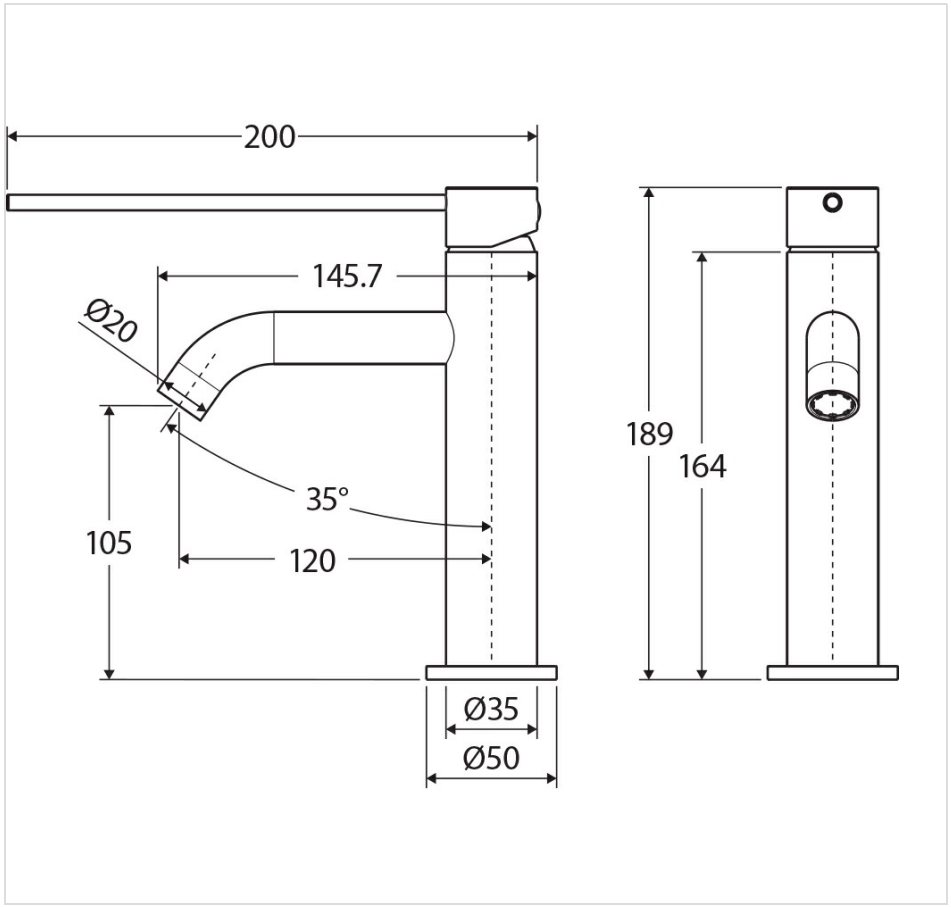



Specifications

Overall Size	50 mm (L) × 200 mm (W) × 189 mm (H)
Weight	
Warranty	Visit: **fienza.com.au/warranty** for more details
WELS Registration	T36525
WELS Flow Rating	5 Star rated, 5L/min

Product/Installation Notes

This product may have a visible Fienza or Watermark logo.

We aim to ensure that specifications are correct at the time of publication. All measurements are shown in millimetres. Always use measurements of actual product received for final specification as the technical drawing may contain differences. Please note this product may have a visible printed FIENZA or Watermark logo. Due to printing limitations, physical colour may vary from the image shown. FIENZA reserves the right to make modifications without prior notice.