fienza

# KAYA WALL MIXER - SMALL ROUND PLATE - MATTE WHITE

| | |
|---|---|
| **Code** | 228101MW-LF |
| **Colour** | Matte White |
| **Material** | Lead Free Stainless Steel |
| **Install Type** | Wall Mounted |

## Details

- Electroplated matte white finish
- Designed for shower and bath
- Round, pin lever handle
- Made from lead free stainless steel
- High quality European cartridge (35mm)

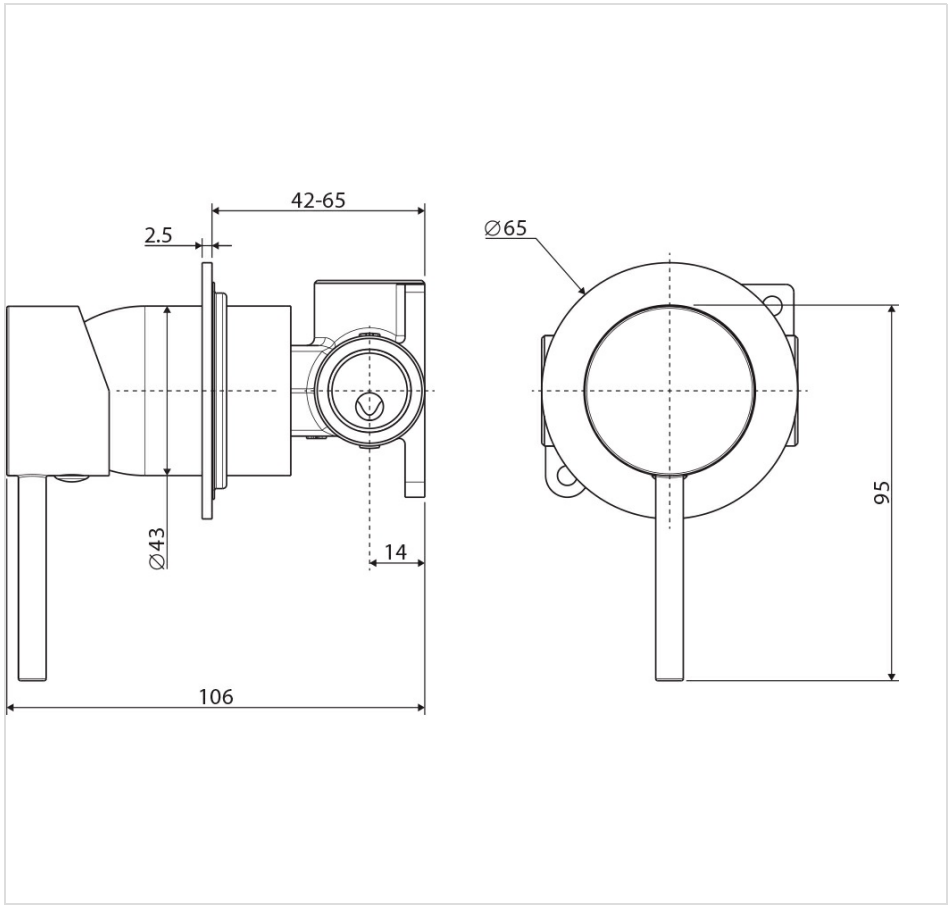




## Product/Installation Notes

This product may have a visible Fienza or WaterMark logo.

## Specifications

| | |
|---|---|
| **Overall Size** | 650 mm (L) × 106 mm (W) × 95 mm (H) |
| **Weight** | 1.05 kg |
| **Warranty** | Visit: **fienza.com.au/warranty** for more details |
| **WELS Registration** | N/A |
| **WELS Flow Rating** | N/A |

We aim to ensure that specifications are correct at the time of publication. All measurements are shown in millimetres. Always use measurements of actual product received for final specification as the technical drawing may contain differences. Please note this product may have a visible printed FIENZA or Watermark logo. Due to printing limitations, physical colour may vary from the image shown. FIENZA reserves the right to make modifications without prior notice.