fienza

KAYA WALL MIXER - LARGE ROUND PLATE - BRUSHED COPPER

Code	228101CO-3
Colour	Brushed Copper
Material	Brass
Install Type	Wall Mounted

Details

- PVD brushed copper finish
- Designed for shower and bath
- Round, pin lever handle
- Made from solid brass
- High quality European cartridge (35mm)

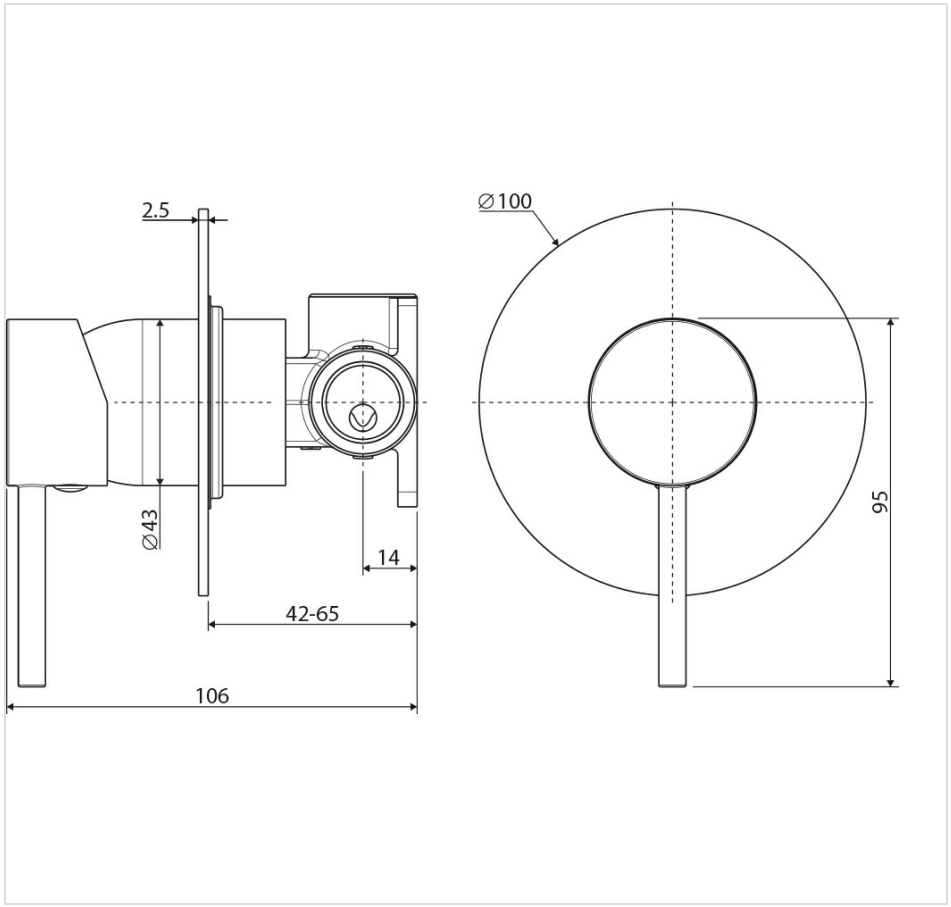



Specifications

Overall Size	100 mm (L) × 106 mm (W) × 95 mm (H)
Weight	1.06 kg
Warranty	Visit: **fienza.com.au/warranty** for more details
WELS Registration	N/A
WELS Flow Rating	N/A

Product/Installation Notes

This product may have a visible Fienza or WaterMark logo.

We aim to ensure that specifications are correct at the time of publication. All measurements are shown in millimetres. Always use measurements of actual product received for final specification as the technical drawing may contain differences. Please note this product may have a visible printed FIENZA or Watermark logo. Due to printing limitations, physical colour may vary from the image shown. FIENZA reserves the right to make modifications without prior notice.