fienza

KAYA WALL MIXER - SMALL ROUND PLATE - MATTE BLACK

Code	228101B-LF
Colour	Matte Black
Material	Lead Free Stainless Steel
Install Type	Wall Mounted

Details

- Electroplated matte black finish
- Designed for shower and bath
- Round, pin lever handle
- Made from lead free stainless steel
- High quality European cartridge (35mm)

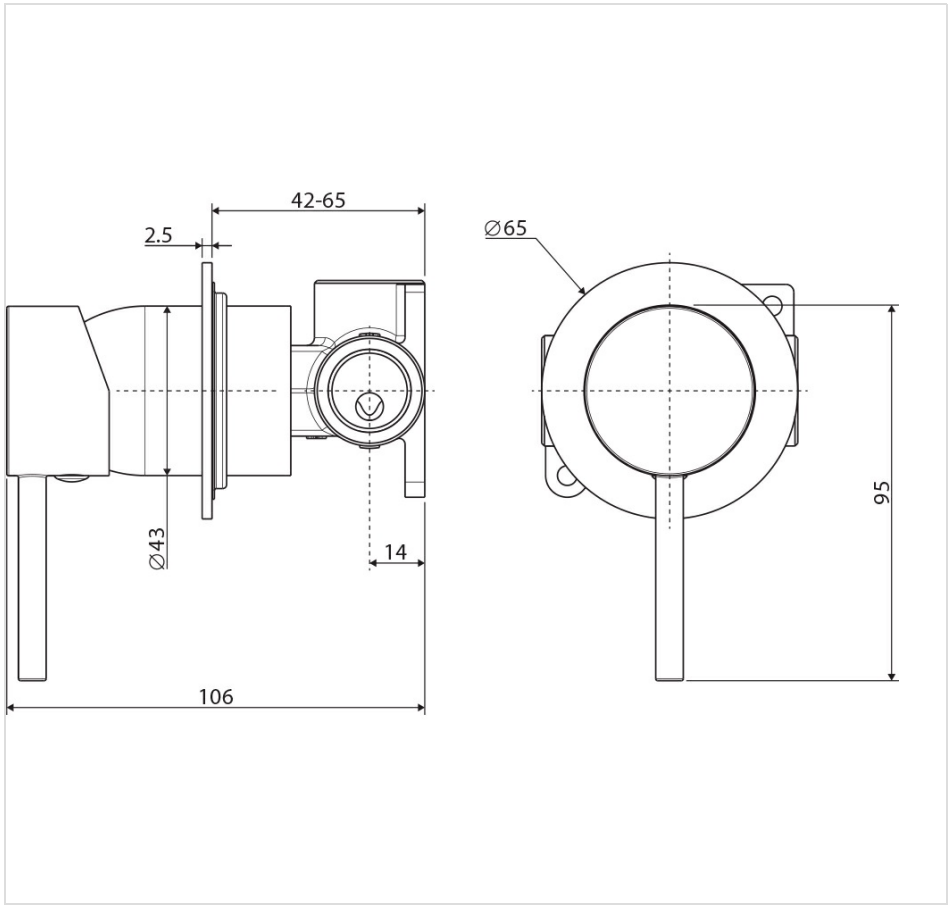



Product/Installation Notes

This product may have a visible Fienza or WaterMark logo.

Specifications

Overall Size	650 mm (L) × 106 mm (W) × 95 mm (H)
Weight	1.05 kg
Warranty	Visit: **fienza.com.au/warranty** for more details
WELS Registration	N/A
WELS Flow Rating	N/A

We aim to ensure that specifications are correct at the time of publication. All measurements are shown in millimetres. Always use measurements of actual product received for final specification as the technical drawing may contain differences. Please note this product may have a visible printed FIENZA or Watermark logo. Due to printing limitations, physical colour may vary from the image shown. FIENZA reserves the right to make modifications without prior notice.