fienza

ELEANOR FLOOR MIXER & SHOWER - URBAN BRASS / URBAN BRASS

Code	202113UU
Colour	Urban Brass
Material	Brass
Install Type	Floor Mounted

Details

- Stunning modern vintage style
- Swivel function bath outlet
- Single function shower head
- Designed for bath
- PVD urban brass finish
- Made from solid brass
- Quality European cartridge, 35mm
- Suitable for mains pressure, max. 500kpa

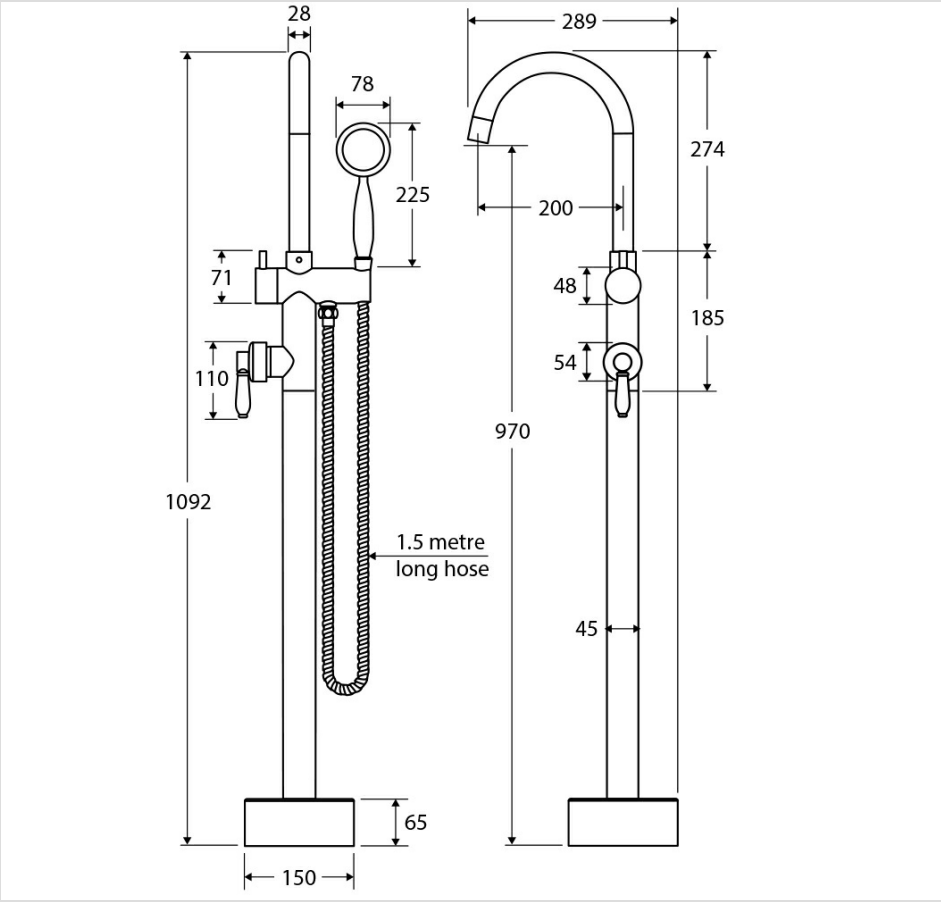



Specifications

Overall Size	150 mm (L) × 289 mm (W) × 1092 mm (H)
Weight	6.64 kg
Warranty	Visit: **fienza.com.au/warranty** for more details
WELS Registration	S14550
WELS Flow Rating	3 Star rated, 8.5L/min

Product/Installation Notes

This product may have a visible Fienza or WaterMark logo.

We aim to ensure that specifications are correct at the time of publication. All measurements are shown in millimetres. Always use measurements of actual product received for final specification as the technical drawing may contain differences. Please note this product may have a visible printed FIENZA or Watermark logo. Due to printing limitations, physical colour may vary from the image shown. FIENZA reserves the right to make modifications without prior notice.