fienza

ELEANOR SHEPHERDS CROOK SINK MIXER - URBAN BRASS / URBAN BRASS

Code	202105UU
Colour	Urban Brass
Material	Brass
Install Type	Bench Mounted

Details

- Stunning modern vintage style
- Swivel function
- Designed for kitchen & above counter basins
- PVD urban brass finish
- Made from solid brass
- Quality European cartridge, 40mm
- Suitable for mains pressure, max. 500kpa
- PEX split-resistant hoses

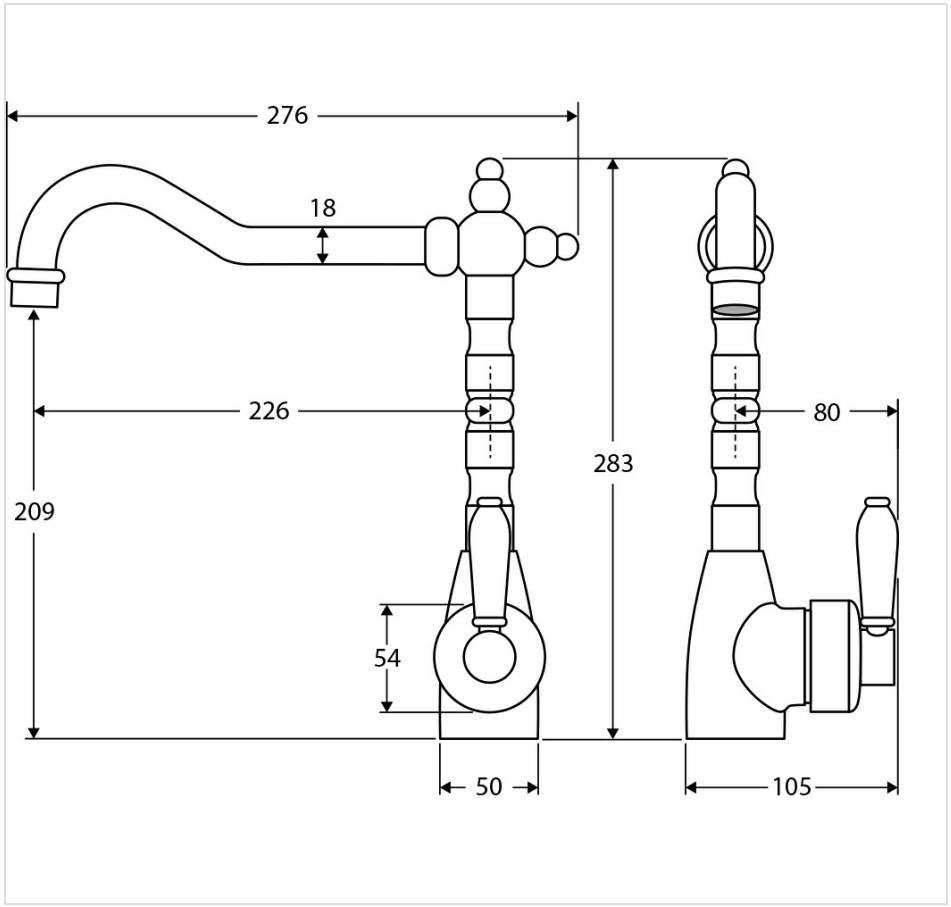



Product/Installation Notes

This product may have a visible Fienza or WaterMark logo.

Specifications

Overall Size	1050 mm (L) × 276 mm (W) × 283 mm (H)
Weight	2.02 kg
Warranty	Visit: **fienza.com.au/warranty** for more details
WELS Registration	T30666
WELS Flow Rating	5 Star rated, 5.5L/min

We aim to ensure that specifications are correct at the time of publication. All measurements are shown in millimetres. Always use measurements of actual product received for final specification as the technical drawing may contain differences. Please note this product may have a visible printed FIENZA or Watermark logo. Due to printing limitations, physical colour may vary from the image shown. FIENZA reserves the right to make modifications without prior notice.