fienza

# ELEANOR GOOSENECK BASIN MIXER - URBAN BRASS / URBAN BRASS

| | |
|---|---|
| **Code** | 202104UU-LF |
| **Colour** | Urban Brass |
| **Material** | Lead Free Brass |
| **Install Type** | Bench Mounted |

## Details

- Stunning modern vintage style
- Swivel function
- PVD urban brass finish
- Made from lead free brass*
- Quality European cartridge, 40mm
- Suitable for mains pressure, max. 500kpa
- PEX split-resistant hoses

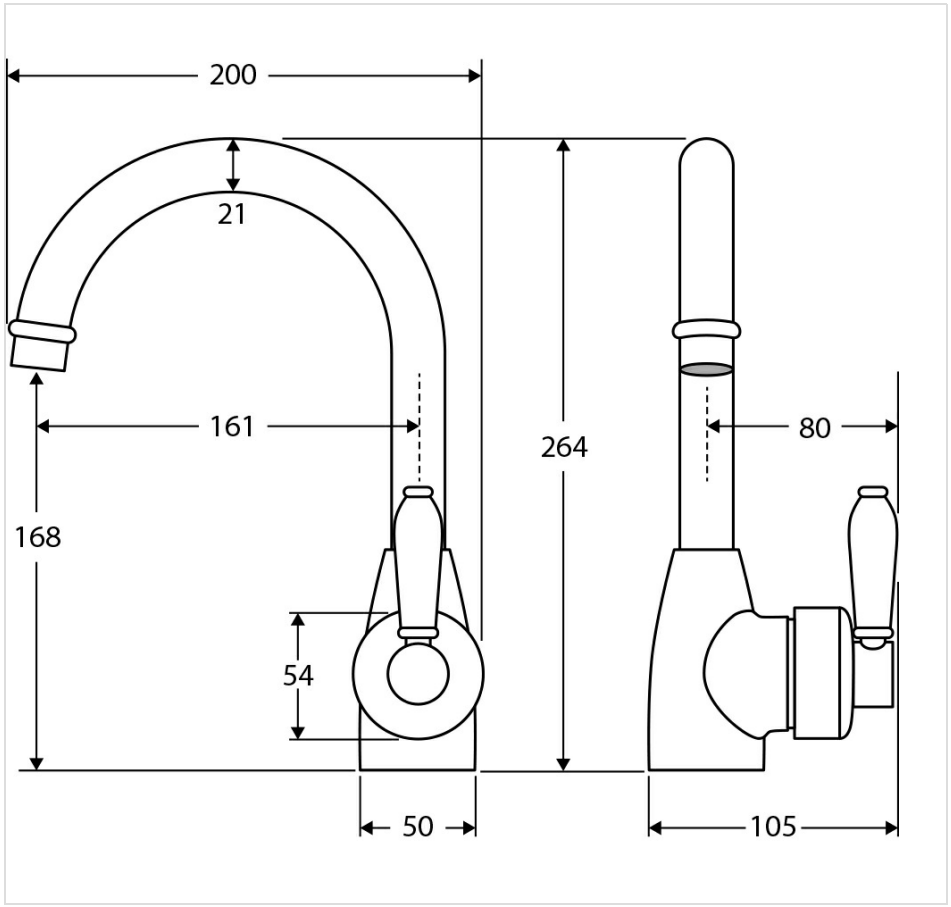




## Product/Installation Notes

This product may have a visible Fienza or WaterMark logo.

## Specifications

| | |
|---|---|
| **Overall Size** | 1050 mm (L) × 200 mm (W) × 264 mm (H) |
| **Weight** | 1.63 kg |
| **Warranty** | Visit: **fienza.com.au/warranty** for more details |
| **WELS Registration** | T30665 |
| **WELS Flow Rating** | 5 Star rated, 5.5L/min |

We aim to ensure that specifications are correct at the time of publication. All measurements are shown in millimetres. Always use measurements of actual product received for final specification as the technical drawing may contain differences. Please note this product may have a visible printed FIENZA or Watermark logo. Due to printing limitations, physical colour may vary from the image shown. FIENZA reserves the right to make modifications without prior notice.