fienza

ELEANOR SHEPHERDS CROOK BASIN MIXER - URBAN BRASS / URBAN BRASS

Code	202103UU-LF
Colour	Urban Brass
Material	Lead Free Brass
Install Type	Bench Mounted

Details

- Stunning modern vintage style
- Swivel function
- PVD urban brass finish
- Made from lead free brass*
- Quality European cartridge, 40mm
- Suitable for mains pressure, max. 500kpa
- PEX split-resistant hoses

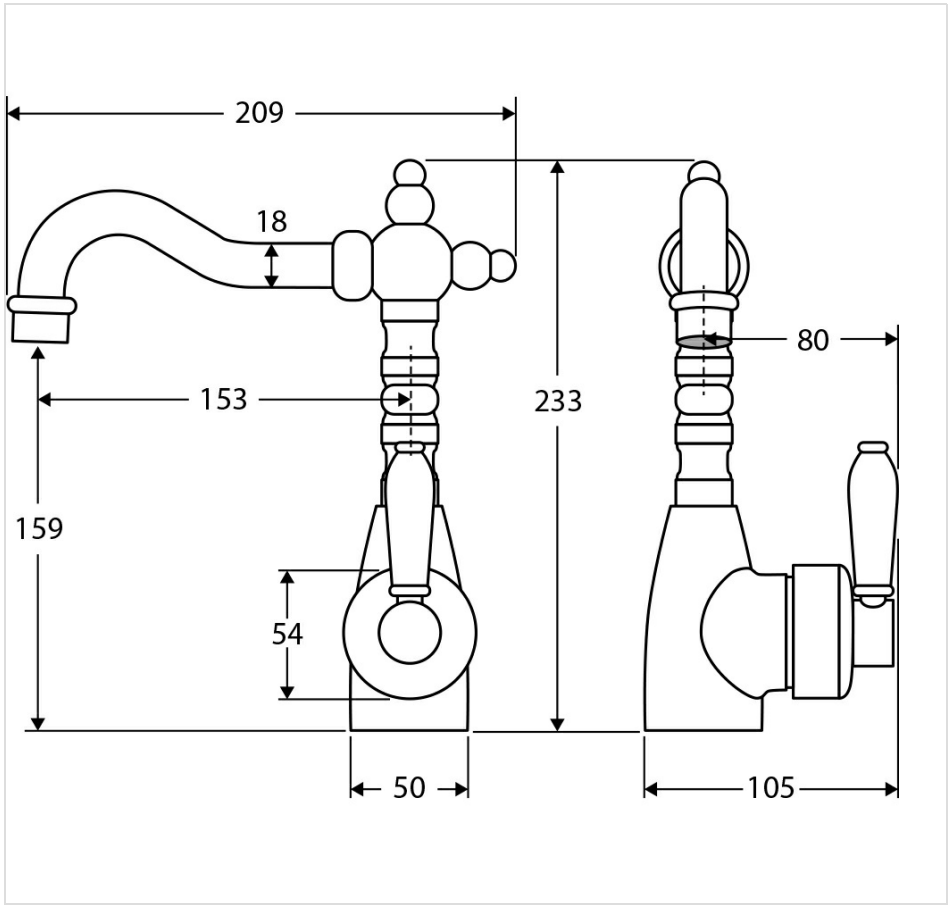



Product/Installation Notes

This product may have a visible Fienza or WaterMark logo.

Specifications

Overall Size	1050 mm (L) × 209 mm (W) × 233 mm (H)
Weight	1.87 kg
Warranty	Visit: **fienza.com.au/warranty** for more details
WELS Registration	T30664
WELS Flow Rating	5 Star rated, 5.5L/min

We aim to ensure that specifications are correct at the time of publication. All measurements are shown in millimetres. Always use measurements of actual product received for final specification as the technical drawing may contain differences. Please note this product may have a visible printed FIENZA or Watermark logo. Due to printing limitations, physical colour may vary from the image shown. FIENZA reserves the right to make modifications without prior notice.