fienza

ELEANOR WALL DIVERTER MIXER - CHROME / CHROME

Code	202102CC
Colour	Chrome
Material	Brass
Install Type	Wall Mounted

Details

- Stunning modern vintage style
- Designed for shower and bath
- Polished chrome finish
- Made from solid brass
- Quality European cartridge, 40mm
- Suitable for mains pressure, max. 500kpa

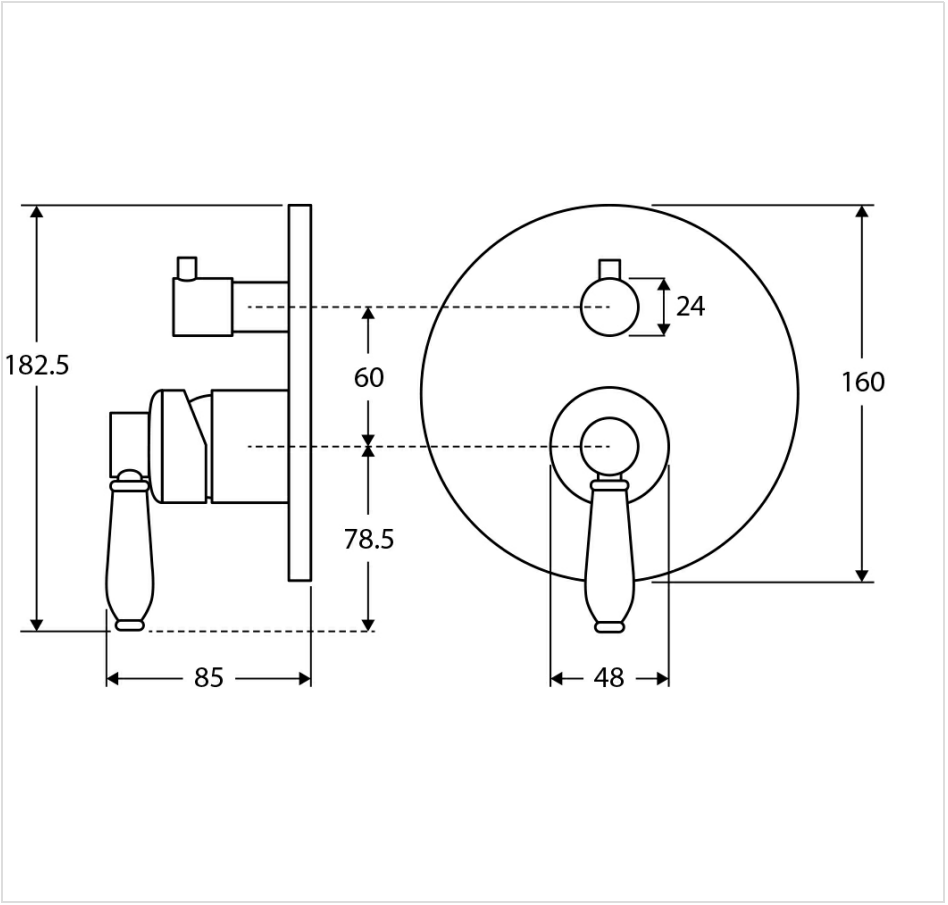



Specifications

Overall Size	160 mm (L) × 85 mm (W) × 182.5 mm (H)
Weight	1.6 kg
Warranty	Visit: **fienza.com.au/warranty** for more details
WELS Registration	N/A
WELS Flow Rating	N/A

Product/Installation Notes

This product may have a visible Fienza or WaterMark logo.

We aim to ensure that specifications are correct at the time of publication. All measurements are shown in millimetres. Always use measurements of actual product received for final specification as the technical drawing may contain differences. Please note this product may have a visible printed FIENZA or Watermark logo. Due to printing limitations, physical colour may vary from the image shown. FIENZA reserves the right to make modifications without prior notice.