fienza

ACCESSIBLE CARE TOILET BACK REST - URBAN BRASS

Code	200992UB
Colour	Urban Brass
Material	304 Stainless Steel & PU Leather
Install Type	Wall Mounted

Details

- Manufactured to comply with relevant requirements for AS 1428.1:2021 Access and Mobility
- Designed to withstand a force of 1100N (110 kg) in any direction

- PVD urban brass
- Frame made from 304 stainless steel
- Cushion made from PU leather
- Concealed fixings
- Mounting bolts and brackets included

Please note: These products may have a visible Fienza logo marking.

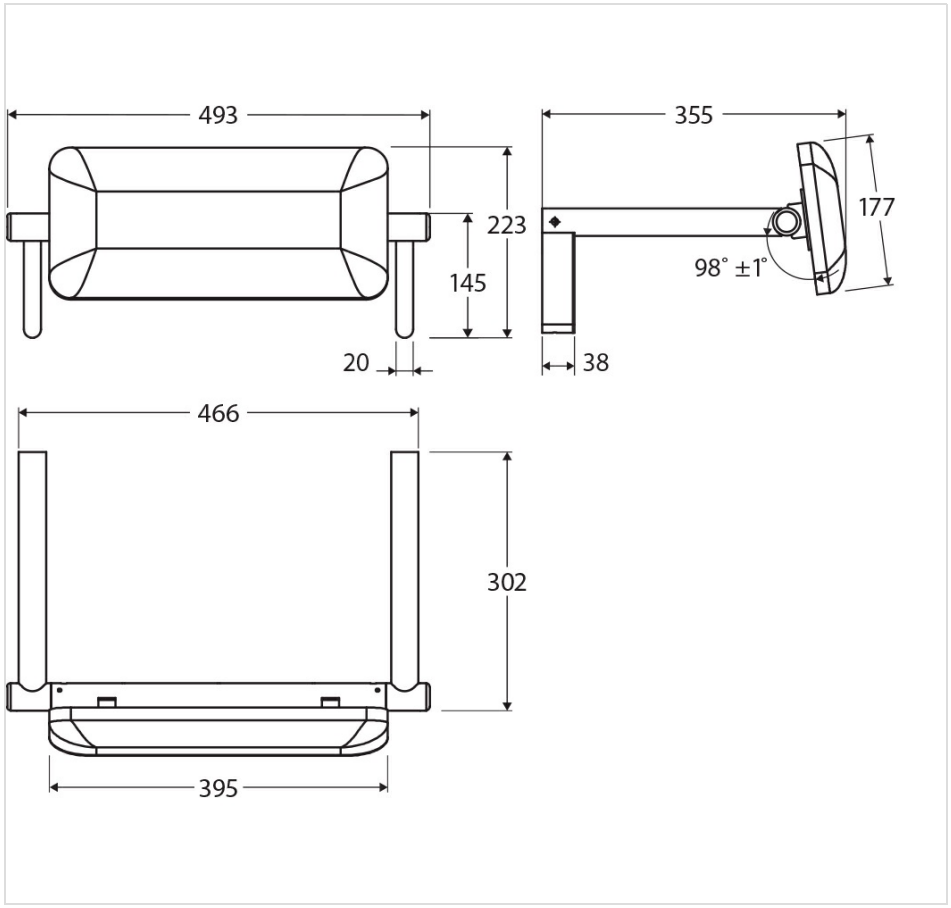



Product/Installation Notes

Suitable support must be included behind the wall for fixing bolts

Specifications

Overall Size	466 mm (L) × 355 mm (W) × 223 mm (H)
Weight	4.54 kg
Warranty	Visit: **fienza.com.au/warranty** for more details
WELS Registration	N/A
WELS Flow Rating	N/A

We aim to ensure that specifications are correct at the time of publication. All measurements are shown in millimetres. Always use measurements of actual product received for final specification as the technical drawing may contain differences. Please note this product may have a visible printed FIENZA or Watermark logo. Due to printing limitations, physical colour may vary from the image shown. FIENZA reserves the right to make modifications without prior notice.