ACCESSIBLE CARE TOILET BACK REST WITH CUSHION PLATE - MATTE BLACK

Code	200990B
Colour	Matte Black
Material	304 Stainless Steel & PU Leather
Install Type	Wall Mounted

Details

- Manufactured to comply with relevant requirements for AS 1428.1:2021 Access and Mobility
- Designed to withstand a force of 1100N (110 kg) in any direction
- Matte black finish
- 304 stainless steel frame
- Concealed fittings with 5-point wall mounts

Please note: These products may have a visible Fienza logo marking.

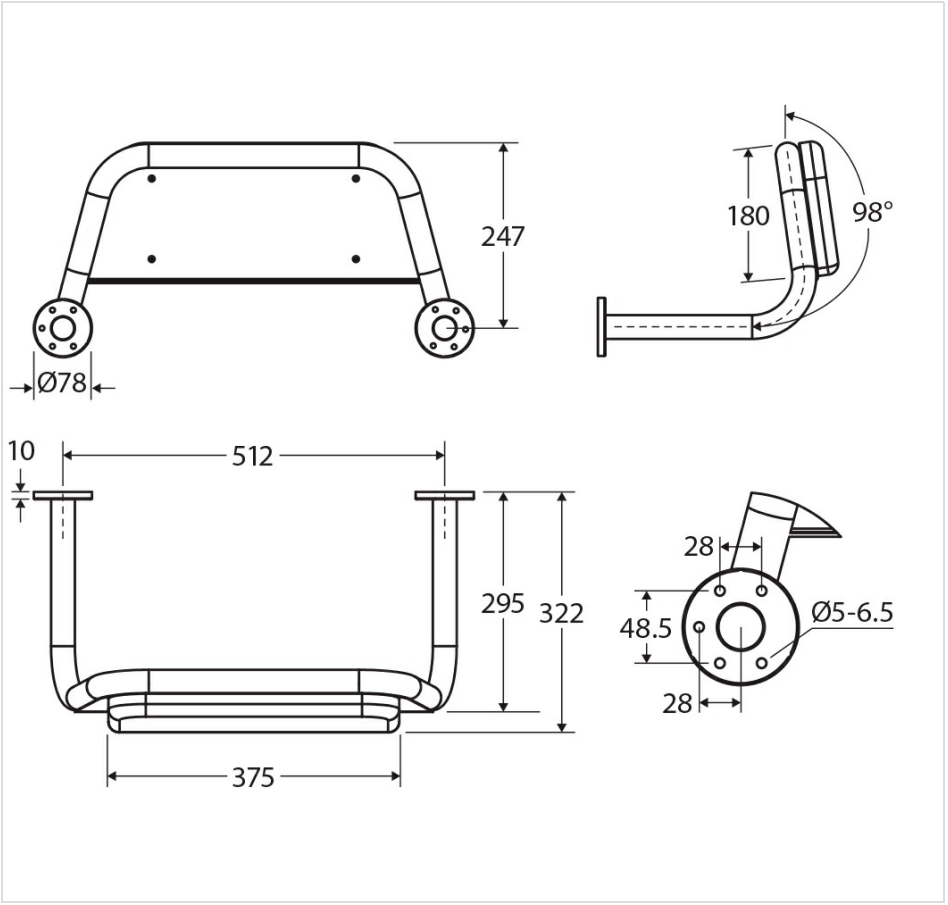



Specifications

Overall Size	512 mm (L) × 322 mm (W) × 247 mm (H)
Weight	2.4 kg
Warranty	Visit: **fienza.com.au/warranty** for more details
WELS Registration	N/A
WELS Flow Rating	N/A

Product/Installation Notes

Suitable support must be included behind the wall for fixing bolts

We aim to ensure that specifications are correct at the time of publication. All measurements are shown in millimetres. Always use measurements of actual product received for final specification as the technical drawing may contain differences. Please note this product may have a visible printed FIENZA or Watermark logo. Due to printing limitations, physical colour may vary from the image shown. FIENZA reserves the right to make modifications without prior notice.