SPECIFICATIONS – STRM081

Star Mini Shower Bracket - Chrome

Features

- WELS 3 Star, 8L/min
- Registration number S14857
- Made from solid brass
- Durable Electroplated finish
- Brass Handpiece
- 1yr parts and labour warranty
- 15 years replacement warranty including finish



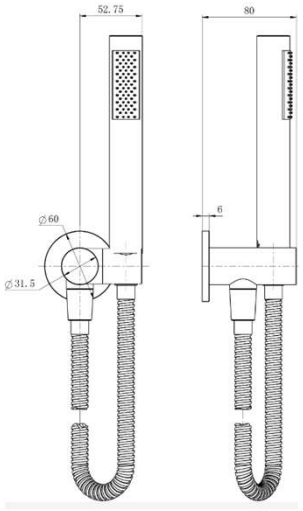

Cleaning & Care

- Regularly clean with mild soapy water
- Do not use harsh detergents, bleach or abrasive cleaners
- The use of any unsuitable cleaning products may damage the surface
- Refer to installation guide for correct installation
- Check for any product defects prior to installation

Available in



SPECIFICATIONS – STRM081BK

Star Mini Shower Bracket – Matt Black

Features

- WELS 3 Star, 8L/min
- Registration number S14857
- Made from solid brass
- Durable Electroplated finish
- Brass Handpiece
- 1yr parts and labour warranty
- 15 years replacement warranty including finish

Cleaning & Care

- Regularly clean with mild soapy water
- Do not use harsh detergents, bleach or abrasive cleaners
- The use of any unsuitable cleaning products may damage the surface
- Refer to installation guide for correct installation
- Check for any product defects prior to installation



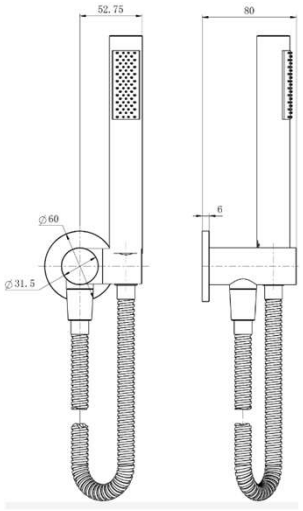

Available in



SPECIFICATIONS – STRM081BC

Star Mini Shower Bracket – Brushed Chrome

Features



- WELS 3 Star, 8L/min
- Registration number S14857
- Made from solid brass
- Durable Electroplated finish
- Brass Handpiece
- 1yr parts and labour warranty
- 15 years replacement warranty including finish

Cleaning & Care

- Regularly clean with mild soapy water
- Do not use harsh detergents, bleach or abrasive cleaners
- The use of any unsuitable cleaning products may damage the surface
- Refer to installation guide for correct installation
- Check for any product defects prior to installation



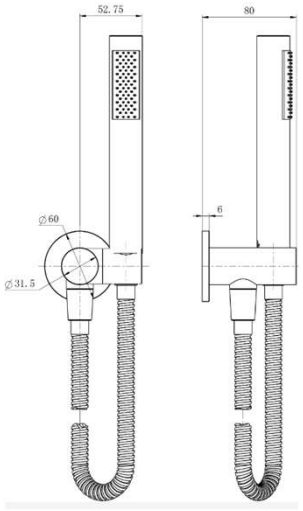

Available in



SPECIFICATIONS – STRM081GM

Star Mini Shower Bracket – Gunmetal

Features



- WELS 3 Star, 8L/min
- Registration number S14857
- Made from solid brass
- Durable Electroplated finish
- Brass Handpiece
- 1yr parts and labour warranty
- 15 years replacement warranty including finish

Cleaning & Care

- Regularly clean with mild soapy water
- Do not use harsh detergents, bleach or abrasive cleaners
- The use of any unsuitable cleaning products may damage the surface
- Refer to installation guide for correct installation
- Check for any product defects prior to installation



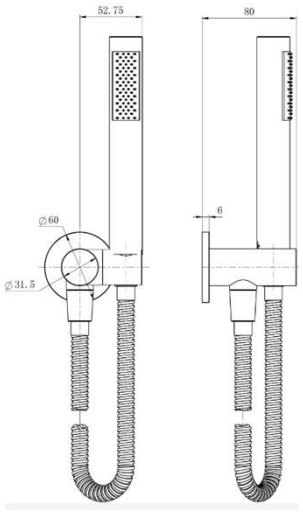

Available in



SPECIFICATIONS – STRM081BM

Star Mini Shower Bracket – Brushed Bronze

Features

- WELS 3 Star, 8L/min
- Registration number S14857
- Made from solid brass
- Durable PVD finish
- Brass Handpiece
- 1yr parts and labour warranty
- 15 years replacement warranty including finish



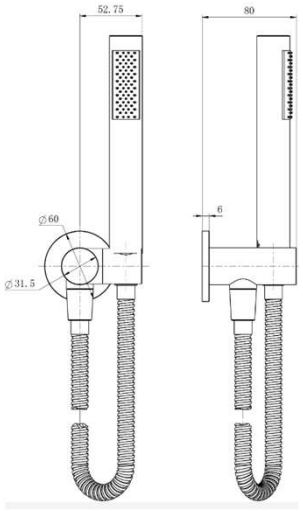

Cleaning & Care

- Regularly clean with mild soapy water
- Do not use harsh detergents, bleach or abrasive cleaners
- The use of any unsuitable cleaning products may damage the surface
- Refer to installation guide for correct installation
- Check for any product defects prior to installation

Available in



SPECIFICATIONS – STRM081BN

Star Mini Shower Bracket – Brushed Nickel

Features



- WELS 3 Star, 8L/min
- Registration number S14857
- Made from solid brass
- Durable PVD finish
- Brass Handpiece
- 1yr parts and labour warranty
- 15 years replacement warranty including finish

Cleaning & Care

- Regularly clean with mild soapy water
- Do not use harsh detergents, bleach or abrasive cleaners
- The use of any unsuitable cleaning products may damage the surface
- Refer to installation guide for correct installation
- Check for any product defects prior to installation



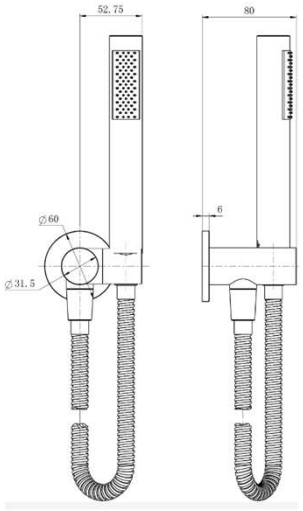

Available in



SPECIFICATIONS – STRM081PB

Star Mini Shower Bracket – Polished Brass

Features



- WELS 3 Star, 8L/min
- Registration number S14857
- Made from solid brass
- Durable PVD finish
- Brass Handpiece
- 1yr parts and labour warranty
- 15 years replacement warranty including finish

Cleaning & Care

- Regularly clean with mild soapy water
- Do not use harsh detergents, bleach or abrasive cleaners
- The use of any unsuitable cleaning products may damage the surface
- Refer to installation guide for correct installation
- Check for any product defects prior to installation



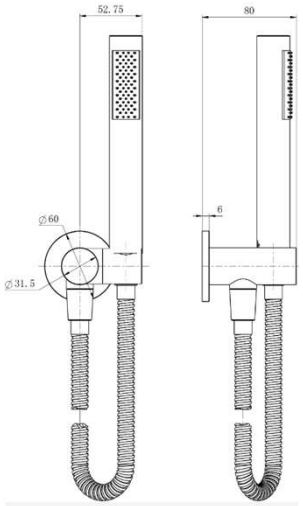

Available in



SPECIFICATIONS – STRM081CM

Star Mini Shower Bracket – Champagne

Features



- WELS 3 Star, 8L/min
- Registration number S14857
- Made from solid brass
- Durable PVD finish
- Brass Handpiece
- 1yr parts and labour warranty
- 15 years replacement warranty including finish

Cleaning & Care

- Regularly clean with mild soapy water
- Do not use harsh detergents, bleach or abrasive cleaners
- The use of any unsuitable cleaning products may damage the surface
- Refer to installation guide for correct installation
- Check for any product defects prior to installation



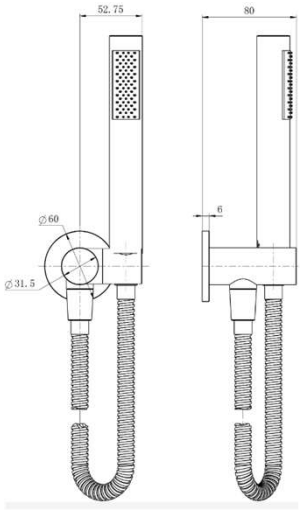

Available in

