Fienza Empire Slim Floor Bath Mixer with Hand Shower - Urban Brass

Product code: 234113UB

Product specification sheet prepared by Bathroom Sales Direct from Fienza product information.

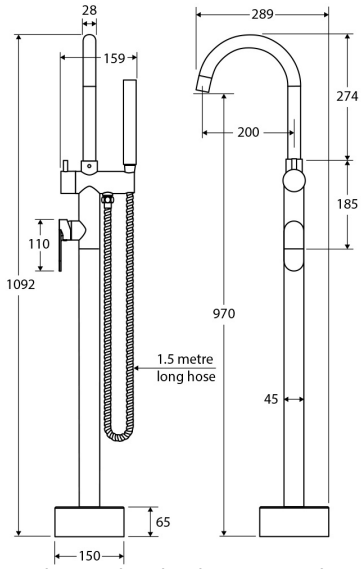

Manufacturer technical drawing. Dimensions are as shown; drawing is not to scale.

Features

- PVD urban brass finish
- Swivel function
- High quality European cartridge (35mm)
- Hand shower with fixed position holder
- Made from solid brass
- 1.5 metre stainless steel shower hose (PVC on matte black model)
- Backflow prevention dual check/non-return valve

Specifications

Collection	Empire Slim
Type	Floor Mounted Bath Mixers
Colour	Urban Brass
Shape	Round
Material	Brass
Installation Type	Floor Mounted
Suits Rooms	Bathroom
Length	150mm
Height	1092mm
Width	289mm
Weight	6.670kg
Spout Reach	200mm
Spout Height	970mm
Swivel Function	Yes
WELS Star Rating	3 Star
WELS Flow Rating	WELS 3 Star rated, 8L/min
WELS Registration Number	S14808
WaterMark Certified	Yes
Assisted Living Suitability	No
Inclusions	Floor Mounted Bath Mixer with Hand Shower, Installation Guide
Product/Installation Notes	This product may have a visible Fienza or WaterMark logo.
Barcode	9347900098883
Brand	Fienza

Source: Fienza product information for 234113UB, checked 3 November 2026. This BSD-prepared sheet is not a manufacturer-issued certificate or installation manual. Refer to the separate installation instructions where provided.