Fienza Empire Slim Wall Mixer - Oval Plate - Chrome

Product code: 234101-LF

Product specification sheet prepared by Bathroom Sales Direct from Fienza product information.

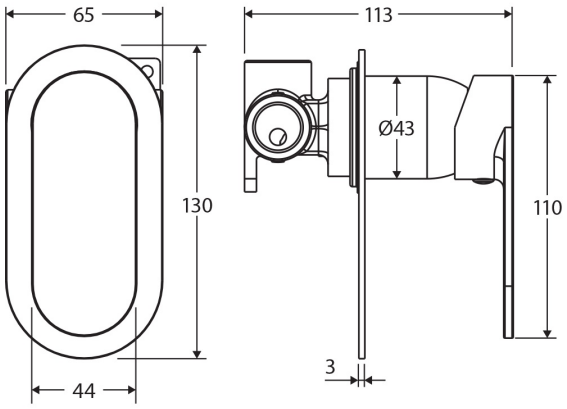

Manufacturer technical drawing. Dimensions are as shown; drawing is not to scale.

Features

- Electroplated chrome finish
- Designed for shower and bath
- High quality European cartridge (35mm)
- Made from lead free stainless steel
- WELS rating not required

Specifications

Collection	Empire Slim
Type	Shower/Bath Wall Mixers
Colour	Chrome
Shape	Oval
Material	Lead Free Brass
Installation Type	Wall Mounted
Suits Rooms	Bathroom
Length	650mm
Height	130mm
Width	113mm
Weight	1.060kg
Swivel Function	No
WaterMark Certified	Yes
Assisted Living Suitability	No
Inclusions	Shower/Bath Wall Mixer, Installation Guide
Product/Installation Notes	This product may have a visible Fienza or WaterMark logo.
Barcode	9347900097480
Brand	Fienza

Source: Fienza product information for 234101-LF, checked 3 November 2026. This BSD-prepared sheet is not a manufacturer-issued certificate or installation manual. Refer to the separate installation instructions where provided.